5G 진화와 주파수 활용

박병성 수석 네트워크 컨설턴트

5G vision

Global mobile data forecast

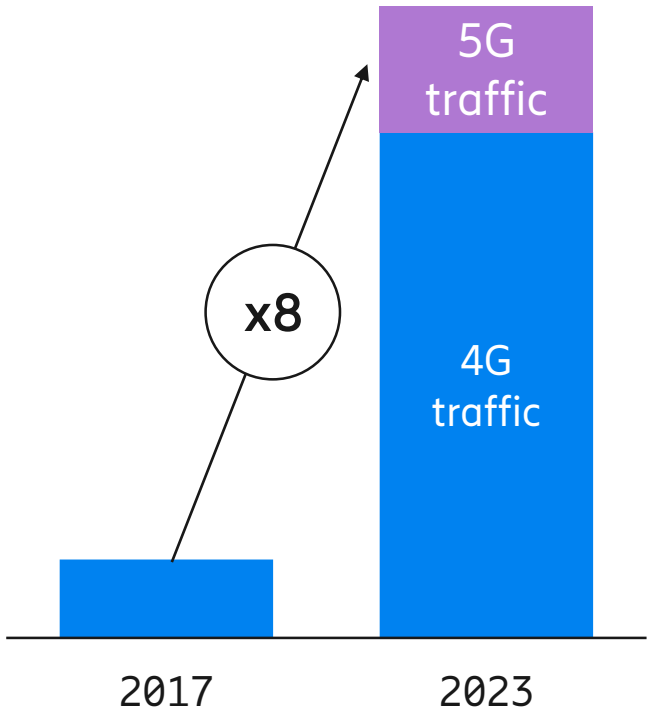

Total service revenue potential for operators in 2026 (USD Billion)

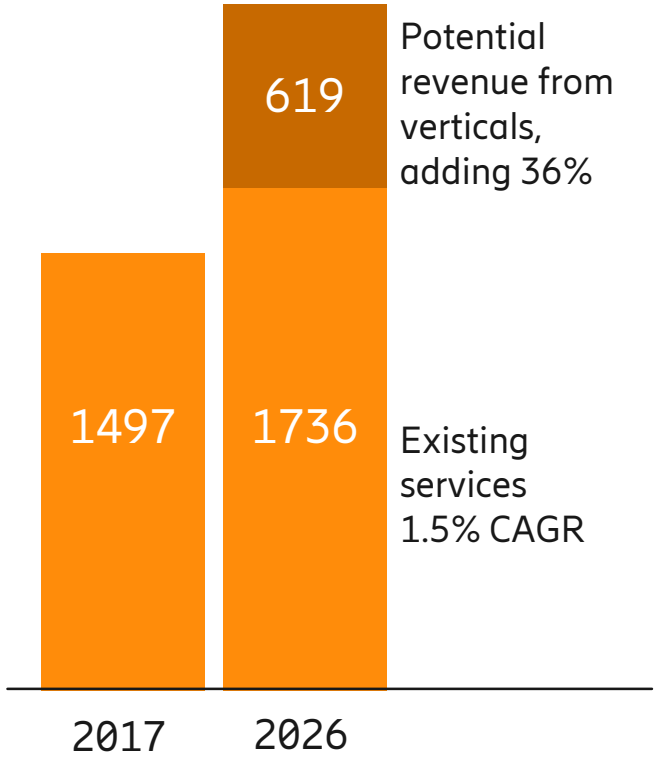

Relative capacity and cost-efficiency

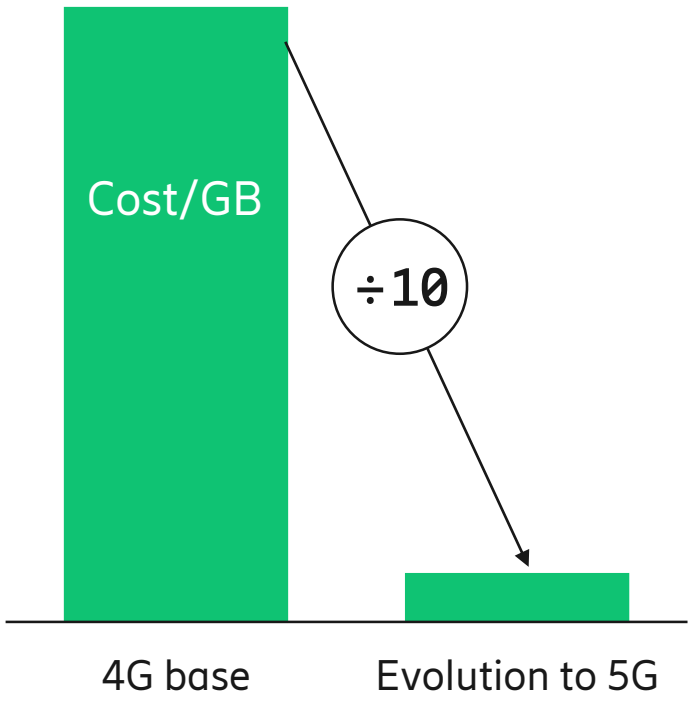

5G timeplan

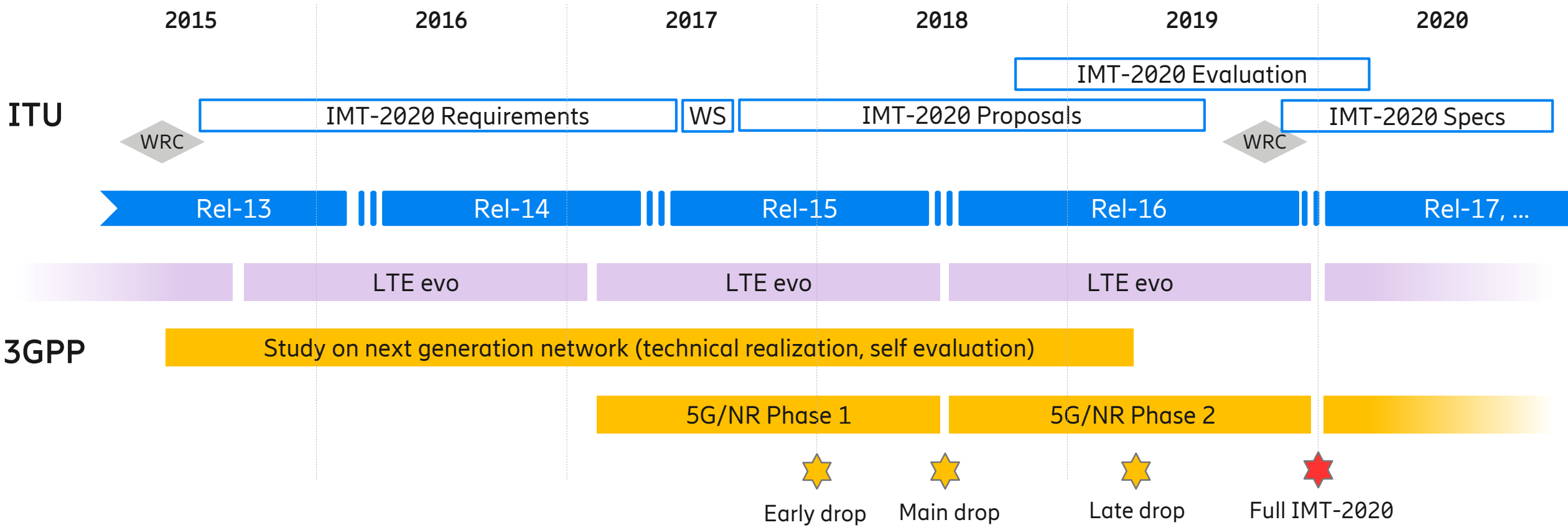
2015
2016
2017
2018
2019
2020
ITU
IMT-2020 Evaluation
IMT-2020 Requirements
WS
IMT-2020 Proposals
IMT-2020 Specs
WRC
WRC
Rel-13
Rel-14
Rel-15
Rel-16
Rel-17, ...
LTE evo
LTE evo
LTE evo
3GPP
Study on next generation network (technical realization, self evaluation)
5G/NR Phase 1
5G/NR Phase 2
Early drop
Main drop
Late drop
Full IMT-2020

5G has multiple connection options

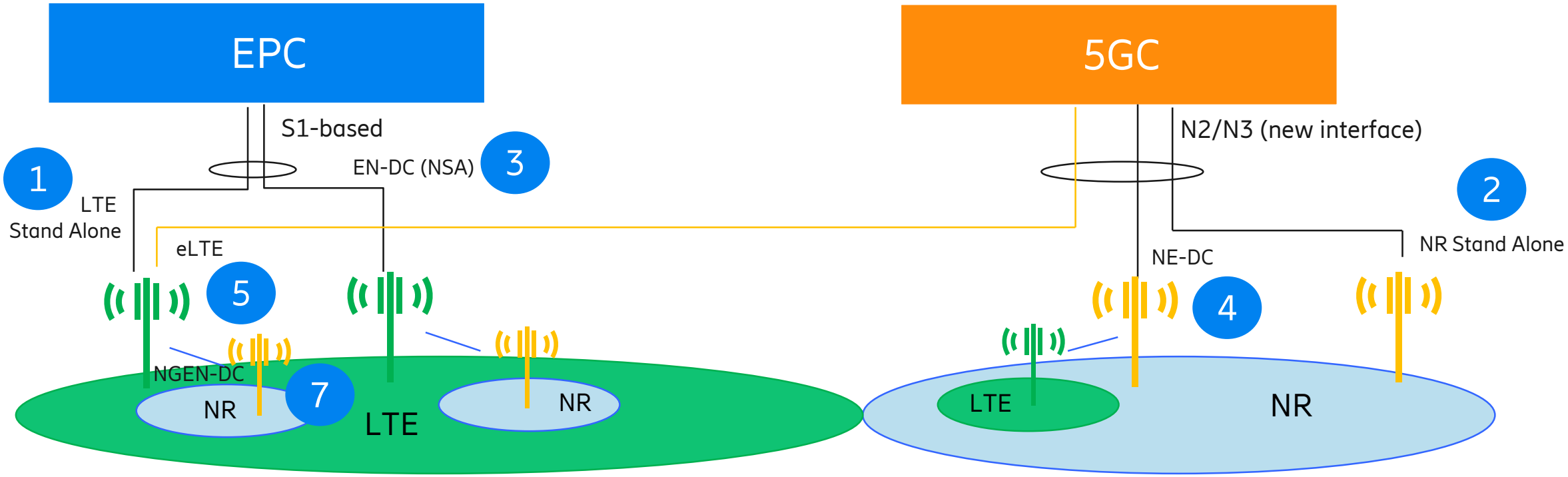

Multi-RAT Dual Connectivity (MR-DC)

DC between LTE & NR

5G connection options

Connectivity option	Core network	Master RAT	Secondary RAT	3GPP term	3GPP release
Option 1	EPC	LTE	-	LTE	Rel-8
Option 3	EPC	LTE	NR	EN-DC	Rel-15 (Dec. 2018)
Option 2	5GC	NR	-	NR	Rel-15 (Jun. 2018)
Option 4	5GC	NR	eLTE	NE-DC	Rel-15 (Mar. 2019)
Option 5	5GC	eLTE	-	eLTE	Rel-15 (Jun. 2018)
Option 7	5GC	eLTE	NR	NGEN-DC	Rel-15 (Mar. 2019)

NR Non-Standalone (NR NSA)

- NR Non-Standalone (NR NSA) introduces the support for the 5G NR air-interface using existing 4G LTE infrastructure.
- NR NSA enhances mobile broadband (eMBB) to provide increased data bandwidth and lower latency while maintaining connection reliability through LTE-NR Dual Connectivity.
- 5G NR node (gNB) is connected to LTE eNB through X2 interface and to EPC/SGW via S1 (user-plane only) interface.

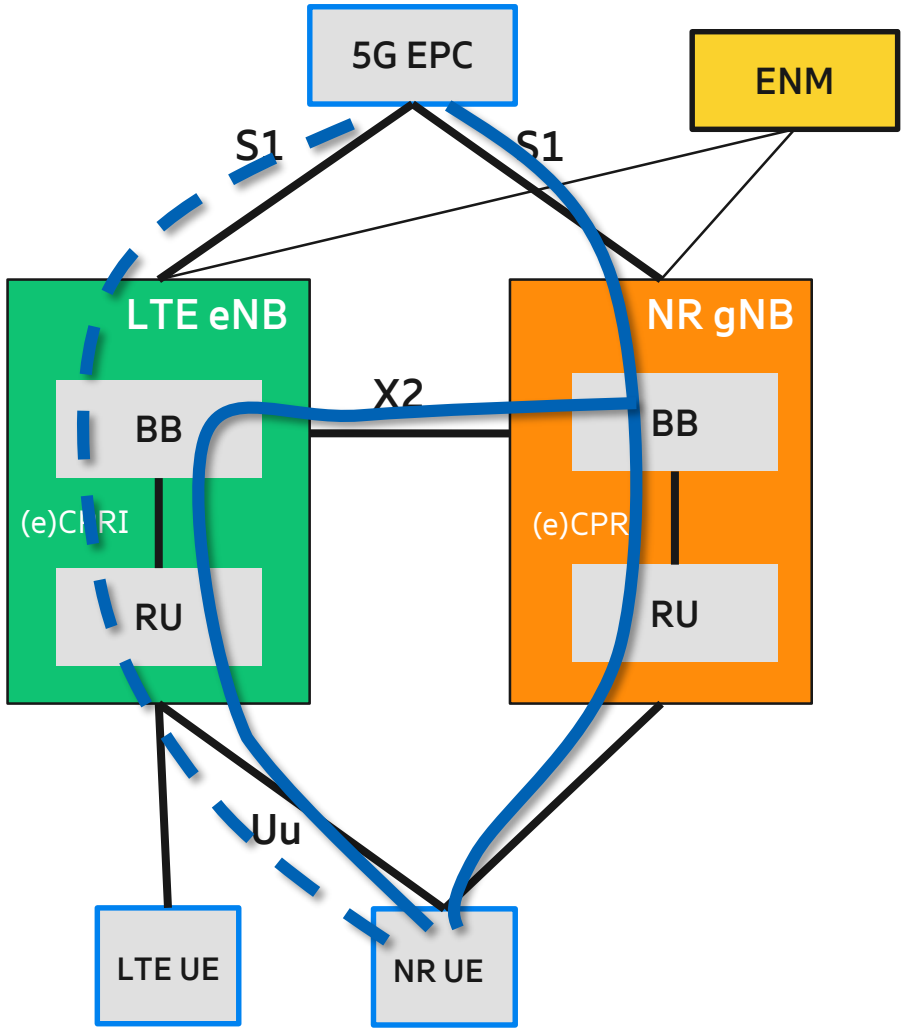

Wide-area coverage:

- NR low bands for coverage
- Inter-system mobility outside NR coverage, instead of Op.5
- NR instead of eLTE

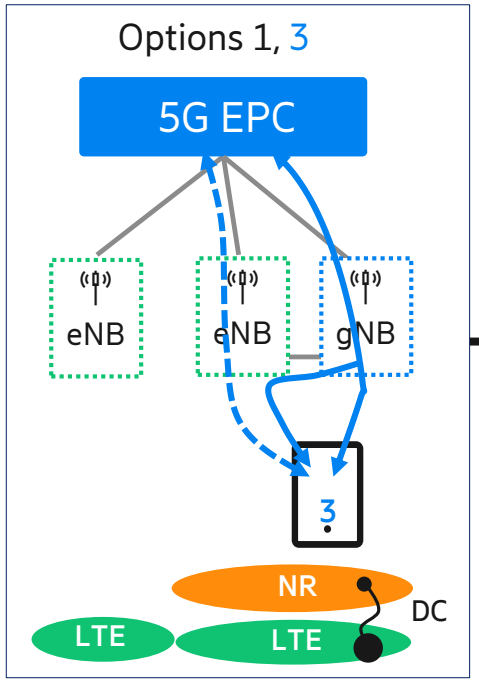

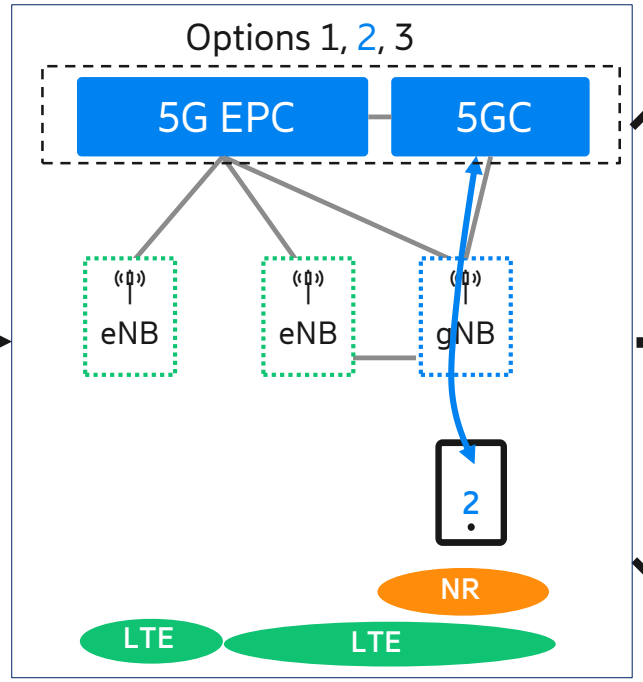

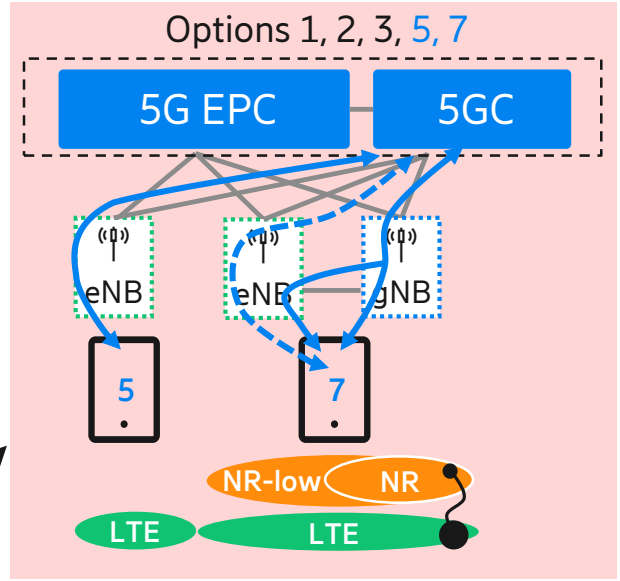

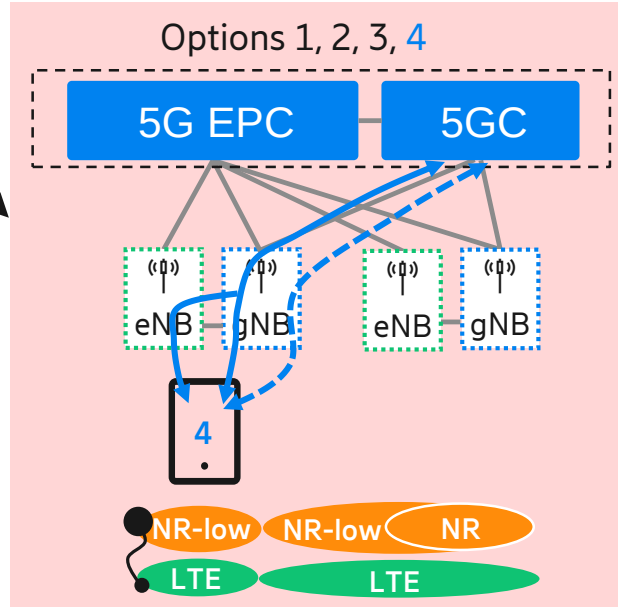

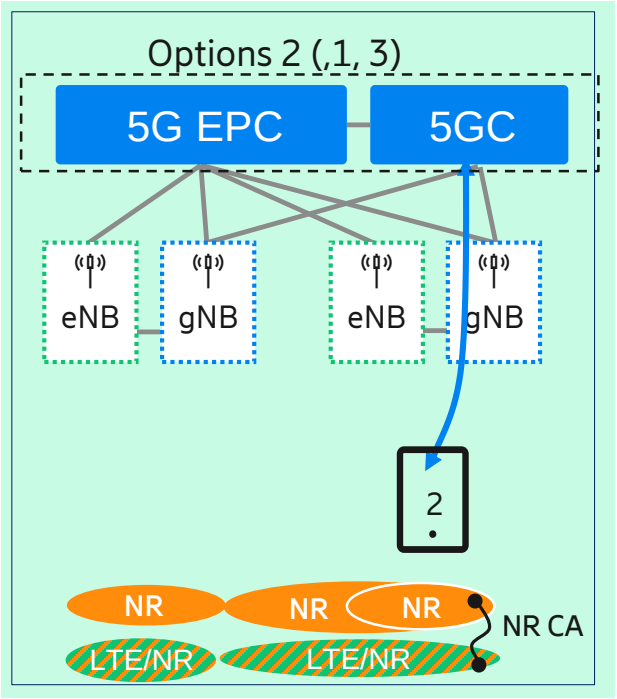

Full 5GC and NR coverage
NR+5GC mainstream
LTE/EPC for legacy devices

UE CP and UP (if no split) or UE UP only (with split)

UE CP only (with split)

If limited NR spectrum @ 5GC MBB intro:

- NR-NR CA + spectrum sharing, and
- Op.3 where limited NR spectrum instead of Op.4

Complexity of UE state transitions

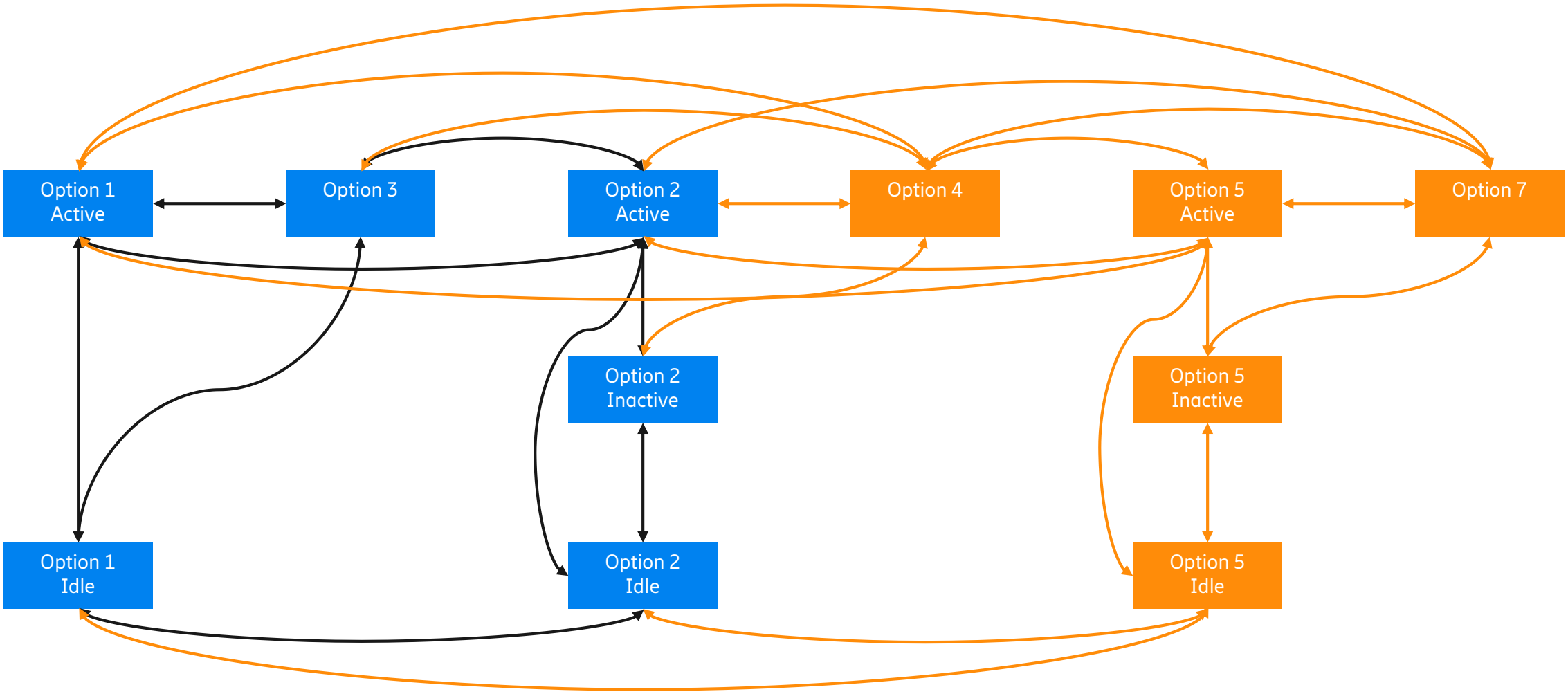

5G network evolution

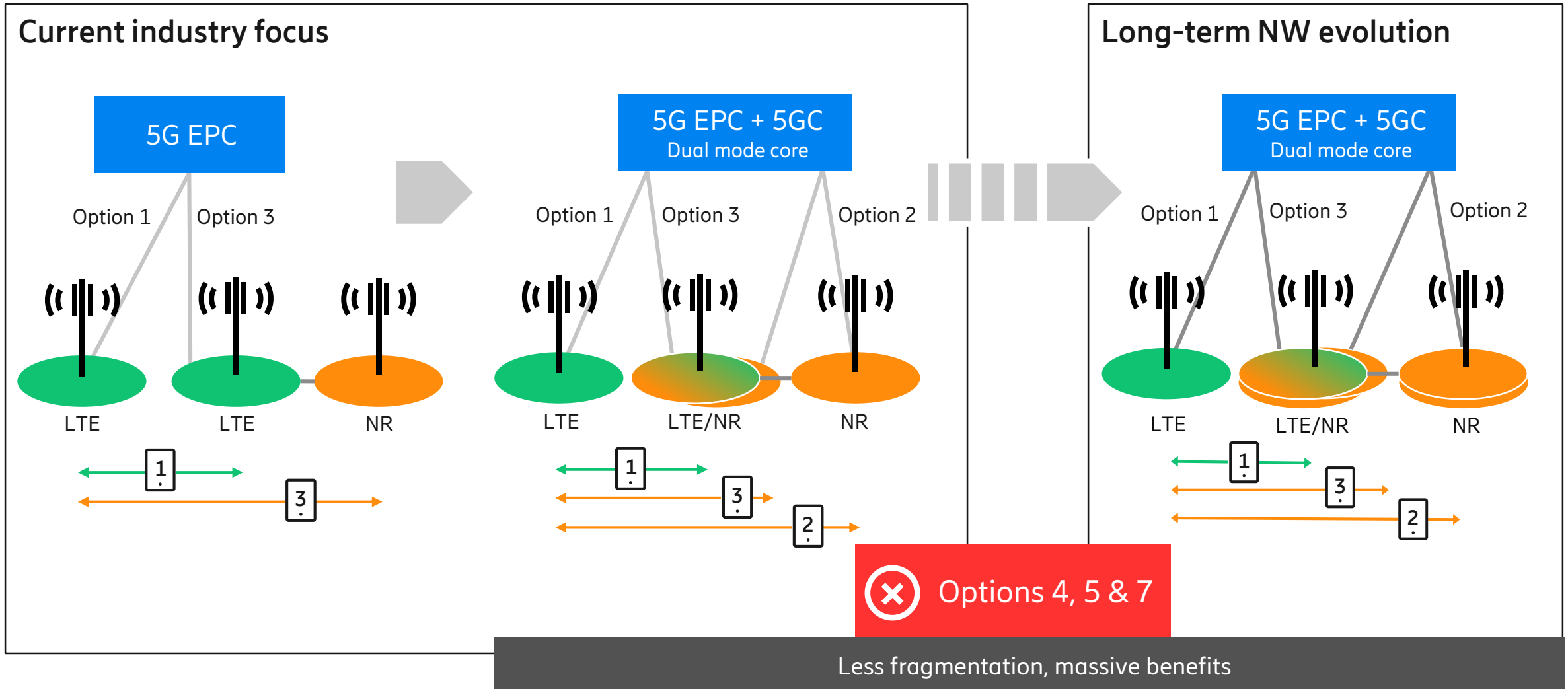

Spectrum evolution example

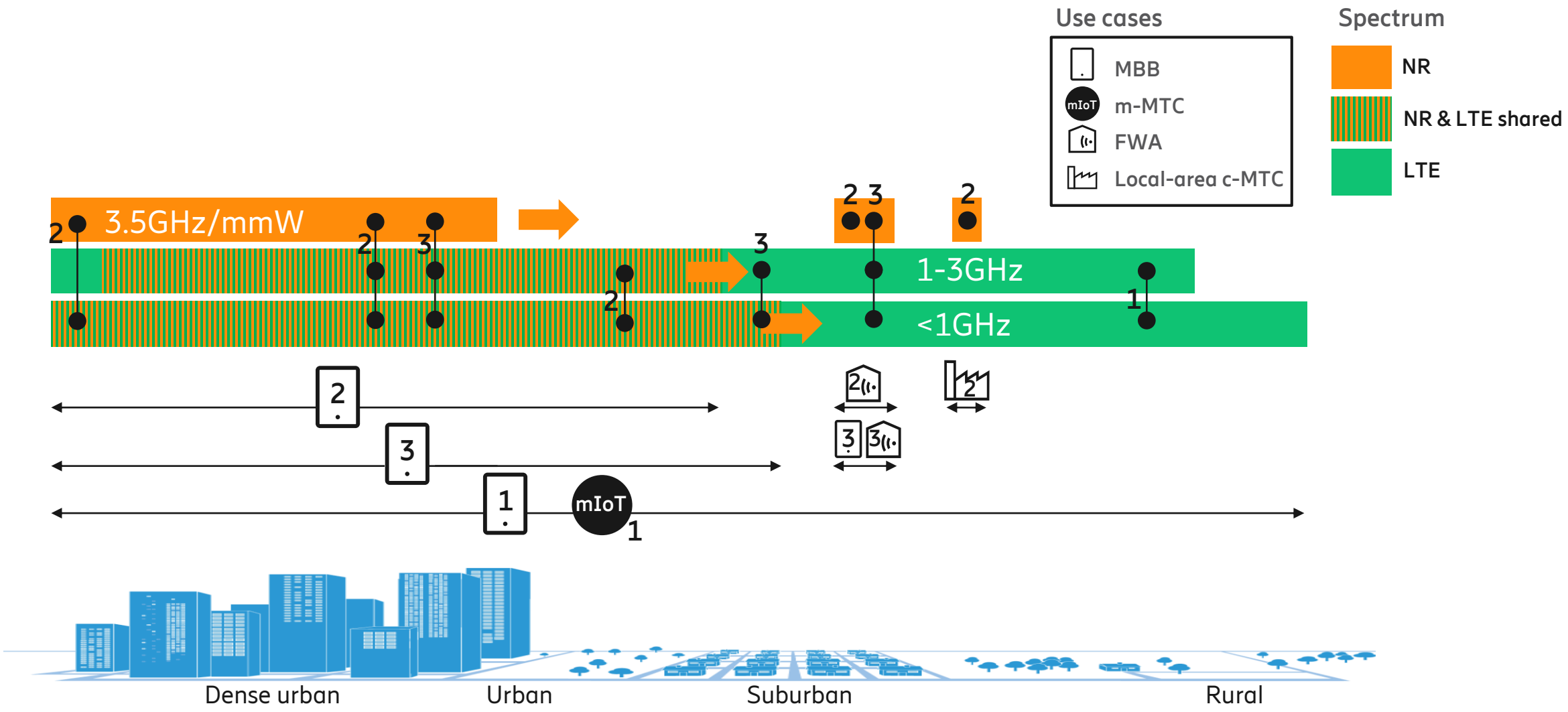

Low-band NR utilization

Race to nationwide NR Coverage

NR performance vs LTE

- Higher spectrum utilization
- Less Overhead
- Lower Latency

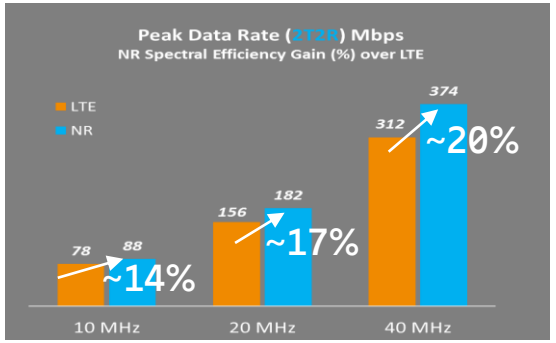

Extend mid- and high-band NR coverage

Rich NR standards evolution

Propagation comparisons

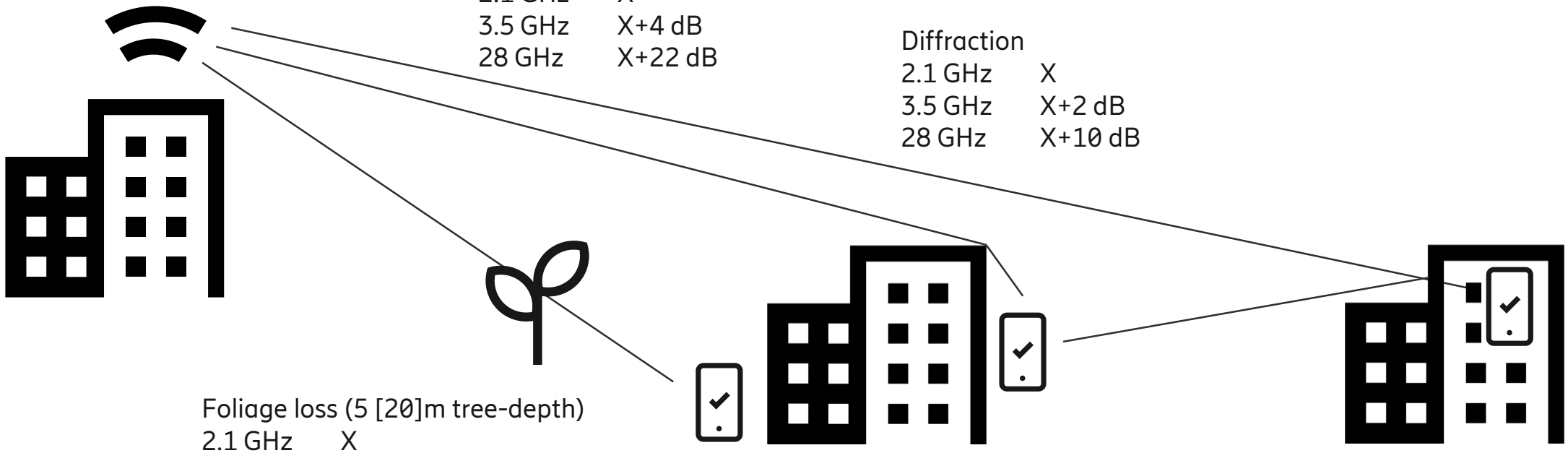

Free-space

2.1 GHz	X
3.5 GHz	X+4 dB
28 GHz	X+22 dB

Diffraction

2.1 GHz	X
3.5 GHz	X+2 dB
28 GHz	X+10 dB

Foliage loss (5 [20]m tree-depth)

2.1 GHz	X
3.5 GHz	X+1 [2] dB
28 GHz	X+6 [14] dB

Wall loss old [new]

2.1 GHz	X
3.5 GHz	X+2 dB
28 GHz	X+7 dB

UL-limited scenario

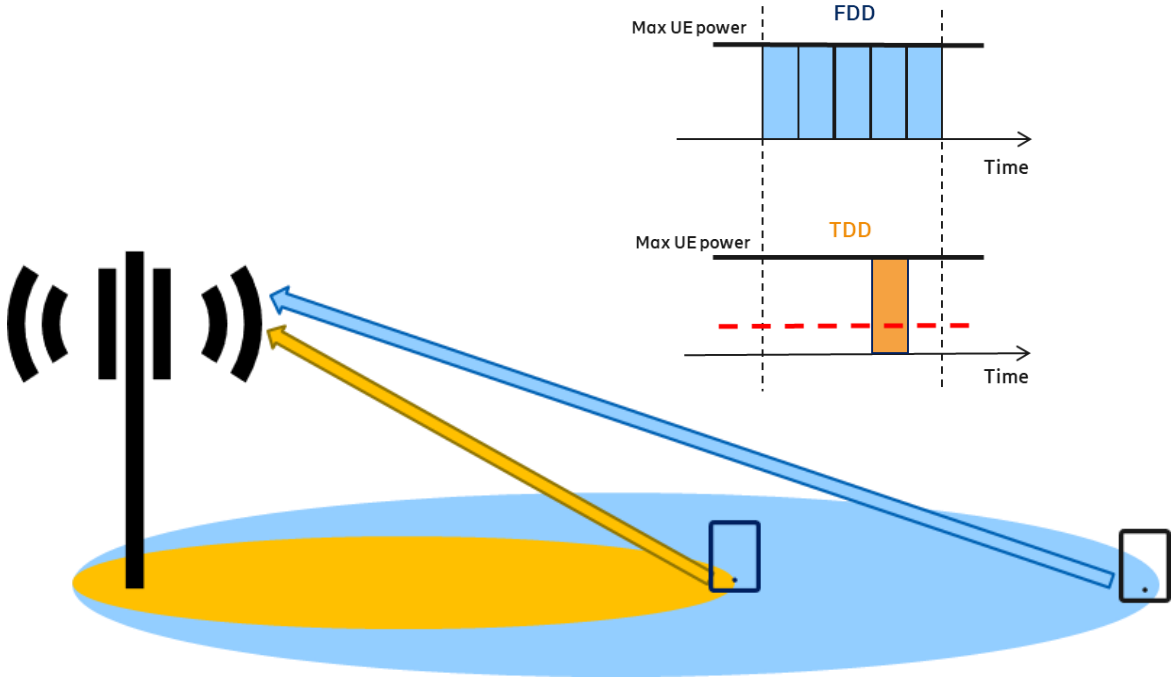

FDD vs. TDD

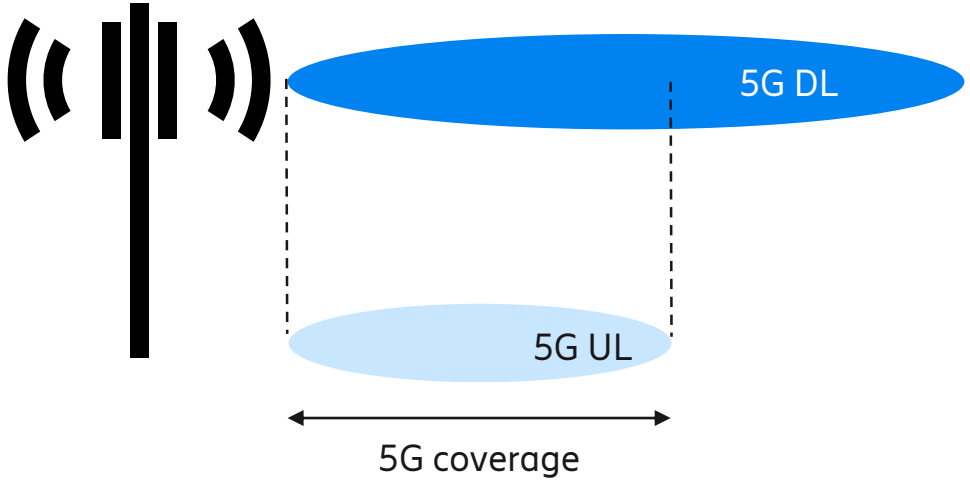

DL/UL decoupling

Low-band utilization: DC vs. CA

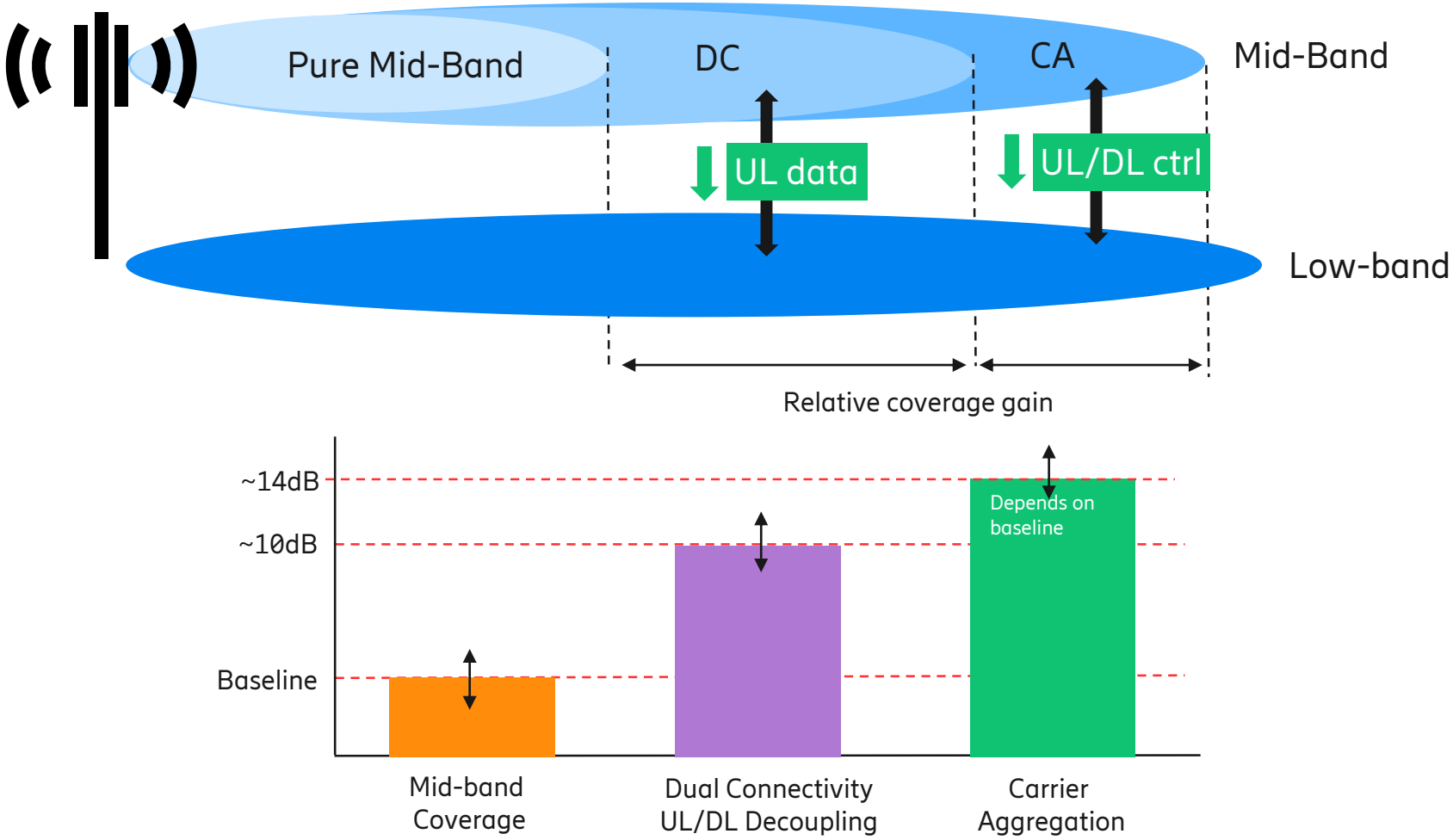

A key enabler: LTE-NR Spectrum Sharing

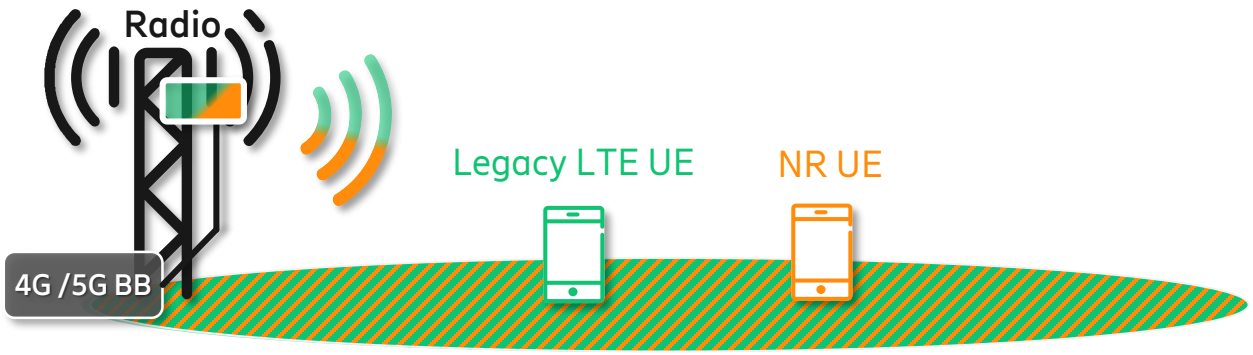

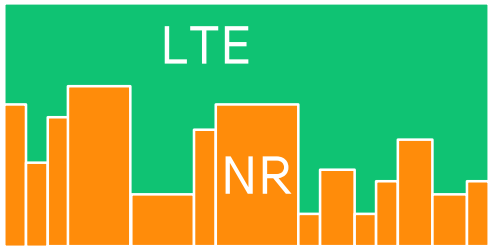

Gradually introduce 5G in 4G frequency based on NR device penetration

Lowest TCO 5G introduction
Shared radio + share baseband, + shared spectrum

Smooth and fast network migration

Re-farming of 4G bands

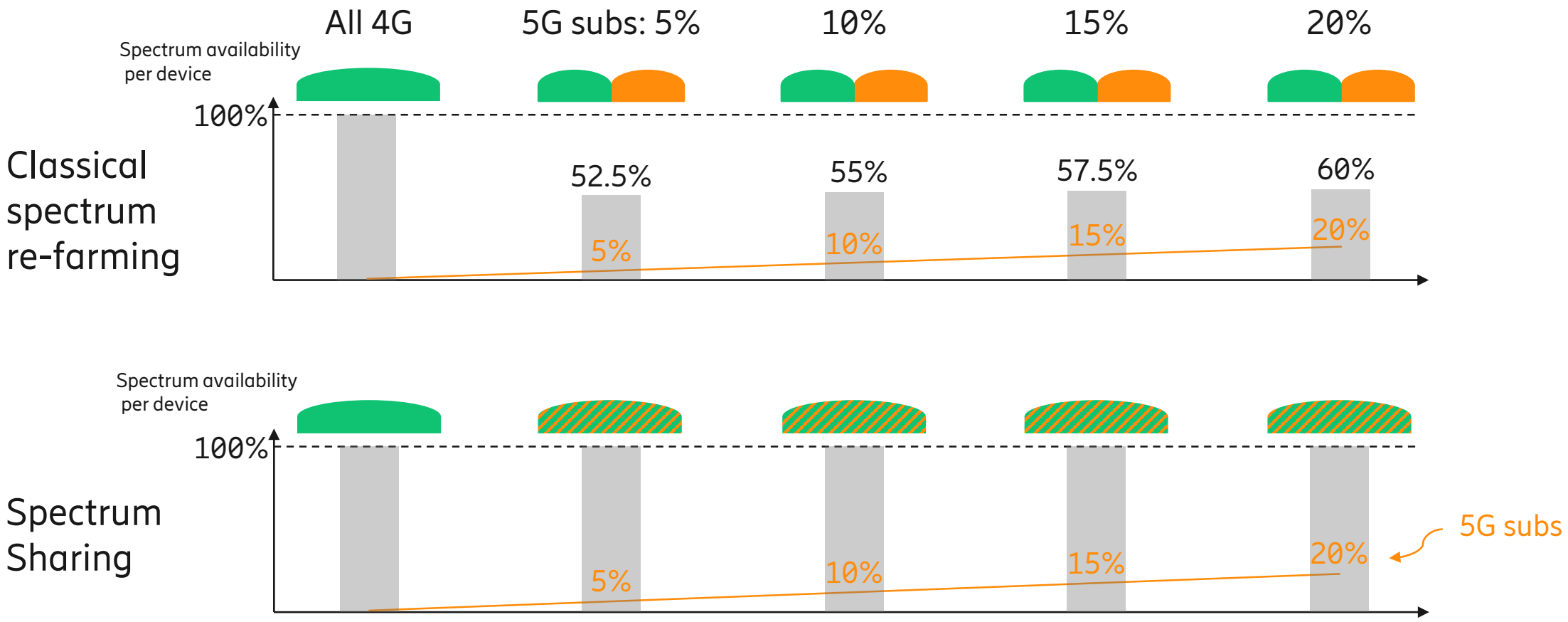

Spectrum migration strategy

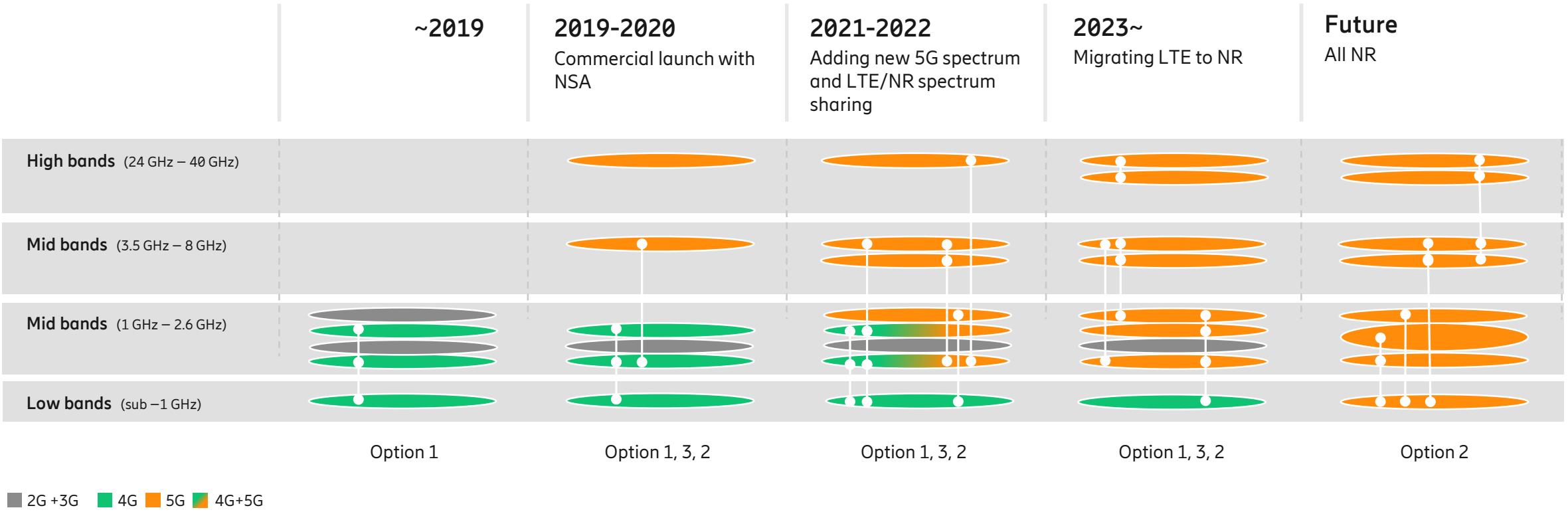

Takeaways

- 5G will continue to evolve for the 5G full capabilities
- Less fragmentation in evolution options can get massive benefits
- Dual mode Core and spectrum sharing are the key to 5G network evolution
- NR in low-band can give several benefits
- LTE/NR spectrum sharing can be utilized for efficient spectrum migration

ERICSSON | LG