클라우드 기반의 듀얼모드 코어

홍석원 실장

Agenda

- What 5G means in Core network
- Cloud Native Core
- Ericsson's 5G platform & dual-mode Core

What 5G means in Core network

5G Key usages

Scale-driven opportunities

Performance-driven opportunities

What's 5G ?

Definition

— 5G is generally seen as the fifth generation cellular network technology that provide **broadband access.** ... 3GPP defines any system using "**5G NR" (5G New Radio)** software as "5G", ...

Usage scenario (ITU-R)

— eMBB, URLLC and mMTC

Technology

— **NR, Massive MIMO**, Edge computing, **small cell, Beamforming, Wifi –cellular convergence** ...

From "en.wikipedia.org"

5G Enabled EPC (EPC+)Network

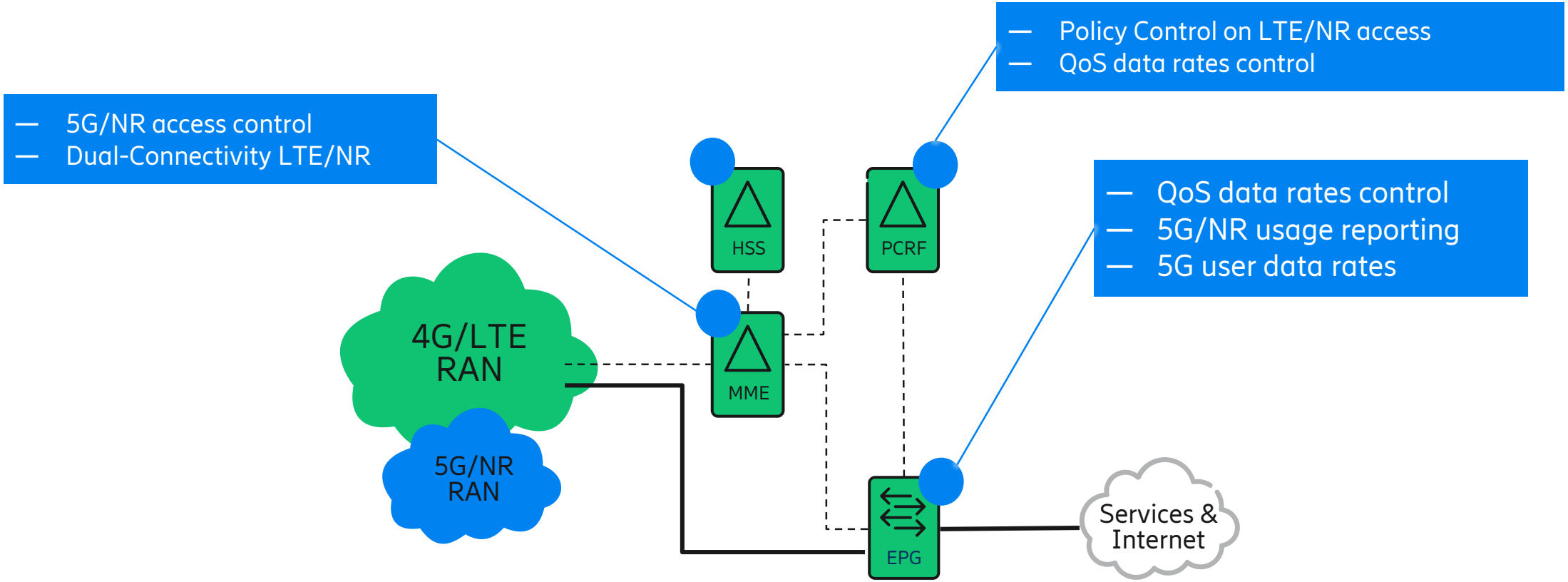

5G EPC is just adding features on EPC to support NR

3GPP 5G standard architectural options

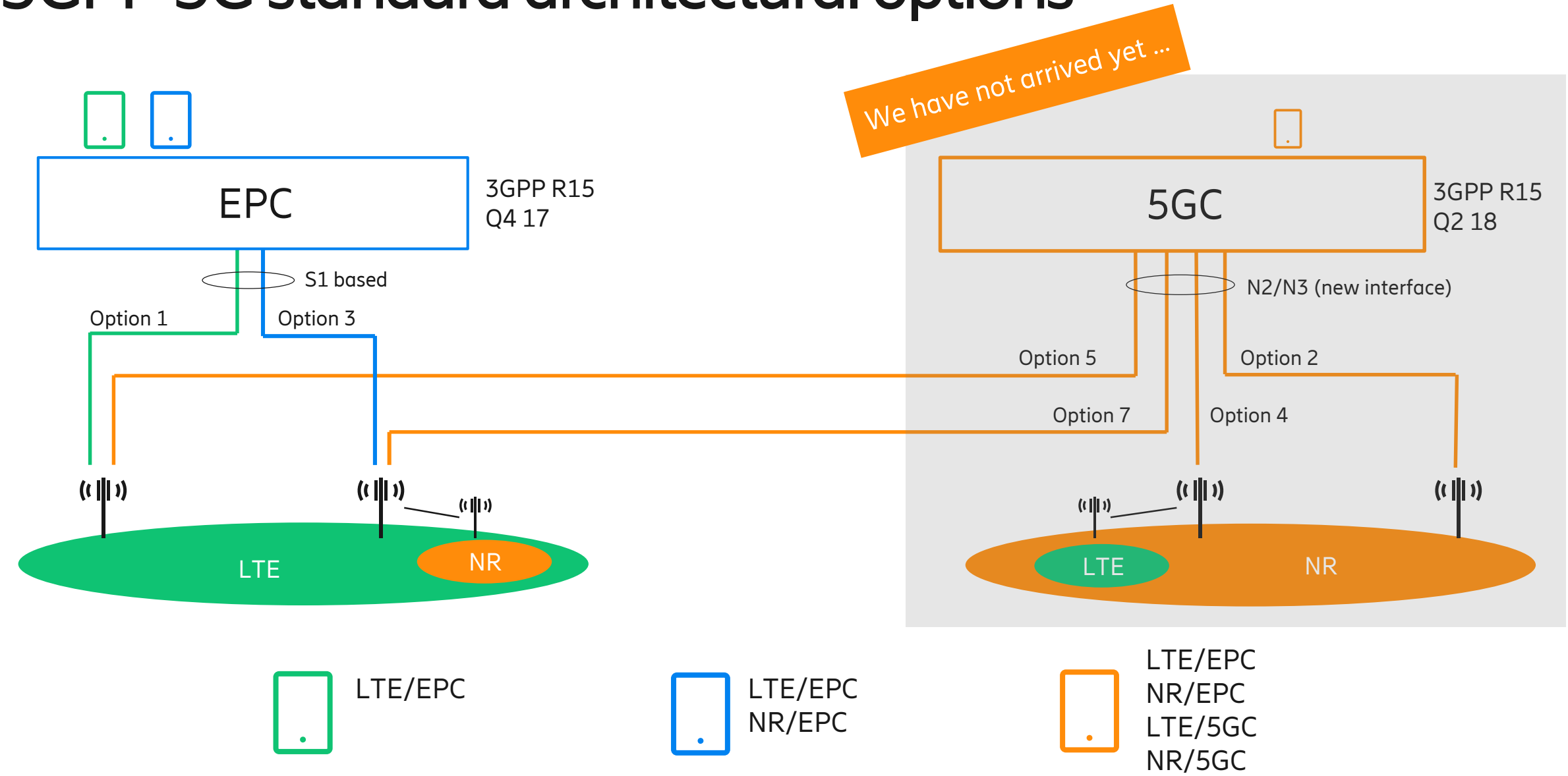

What's 5G in 3GPP

"The 5G System architecture is defined to support data connectivity and services enabling deployments to use techniques such as e.g. Network Function Virtualization and Software Defined Networking."

"The 5G System architecture shall leverage service-based interactions between Control Plane (CP) Network Functions where identified."

From 3GPP TS23.501

Some key principles and concept are to

- Separate CP & UP functions
- Modularized function
- Procedure as service
- Direct NF interaction
- Stateless NFs
- Concurrent access to local & centralized service

5G System architecture

Release 15 included 5GC NFs

Main 5G Core benefits vs EPC

- Supports both SA and NSA deployments of NR
- SBA architecture
- Improved service capabilities
- Support for devices without SIM cards
- Supports strategic ambition to converge 3GPP and non-3GPP access technology support (incl fixed)

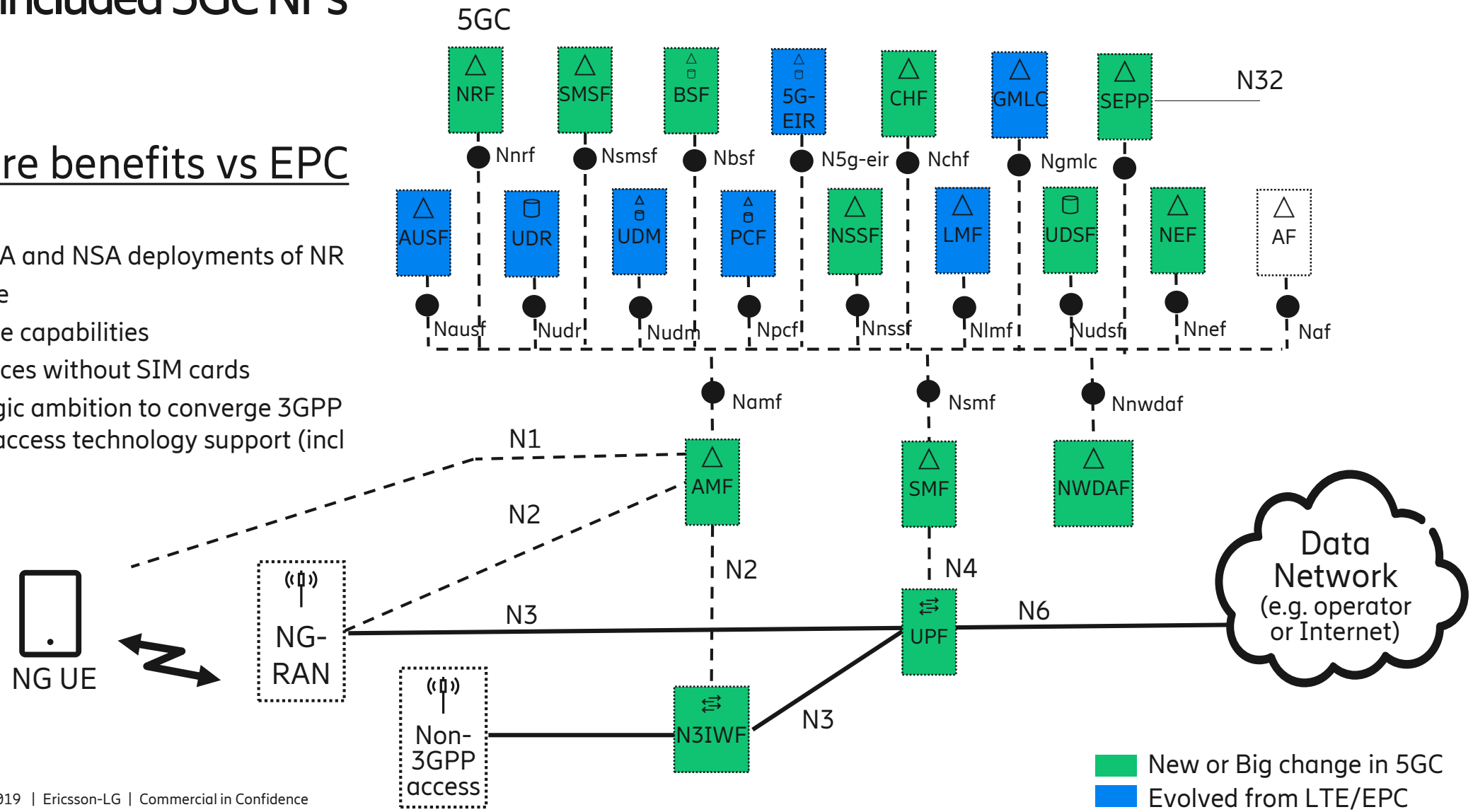

To capitalize on opportunities, 5G must work with other technologies

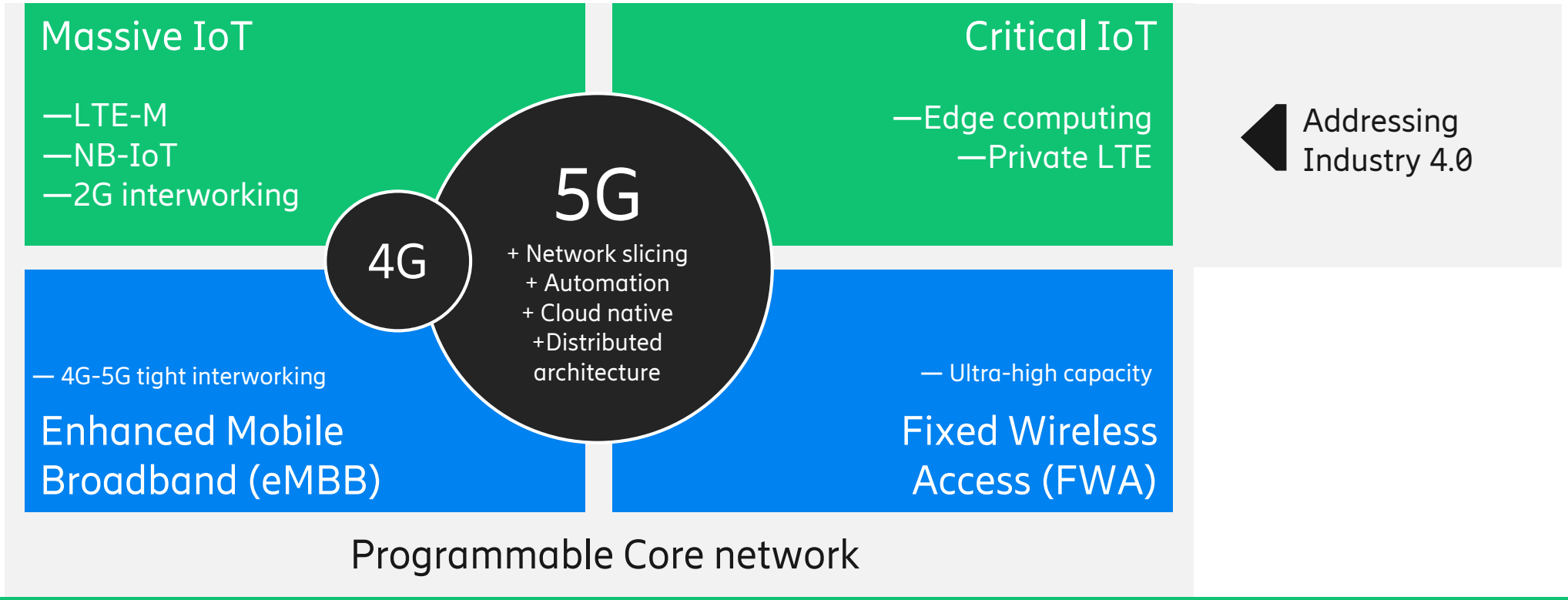

For 5G, real 5G Core with Cloud Native is needed

Cloud Native Core

Beyond the limitation of EPC

Item	EPC	Limitation	Cloud Native 5G Core
Standard	— No consideration of virtualization — Connection (PtoP) based I/F — Lack of node level scaling	— Low level automation / scaling — Manual peer node management	— Virtual based standard from Day 1 — SBI based (Connectionless but service based I/F) — Auto peer node registration (NRF)
Application S/W architecture	— Stateful S/W (tight coupled computing & storage) — VNF level S/W	— Limited scaling — Low speed in LCM	— Stateless / State optimized S/W (full scaling) — Micro-service based -> fast in LCM
Virtualization	— Openstack — Heavy layer w/ guest OS — Not matured network automation	— Low speed in Instantiation, scaling and heal. (several minutes) — Limited in scaling	— Container — Light layer without guest OS -> High speed in Instantiation, scaling and heal (few seconds) — IT verified matured automation based on K8S

Cloud Native is baseline of 5G Core

Cloud Native Computing Foundation

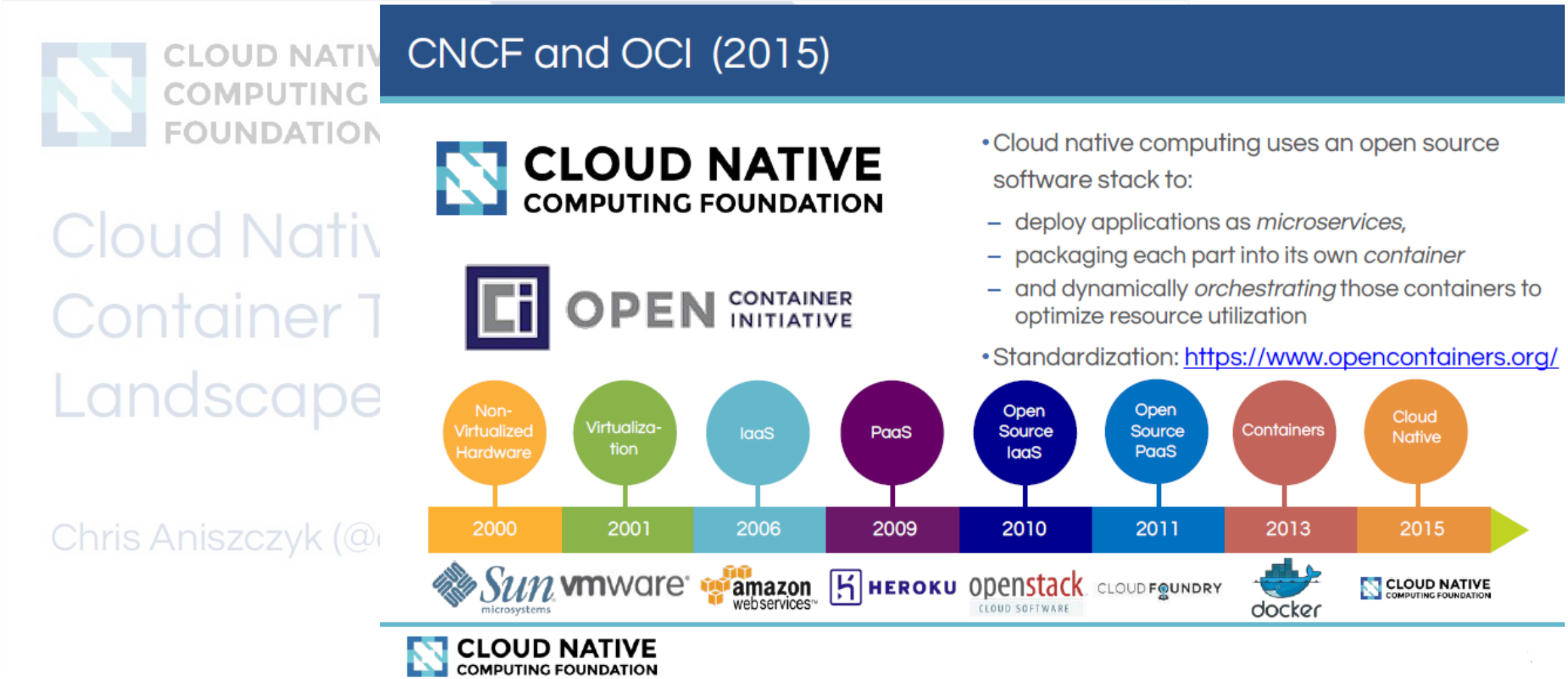

http://events.linuxfoundation.org/sites/events/files/slides/%28OSF_Mr.%20Chris%20Aniszczyk%29CNCF%20%28OS%20Forum%20Japan%202016%29.pdf

Cloud Native key principle

Agnosticity

Decomposed SW

Application resiliency

State optimized design

Orchestration and automation

Cloud Native and Kubernetes

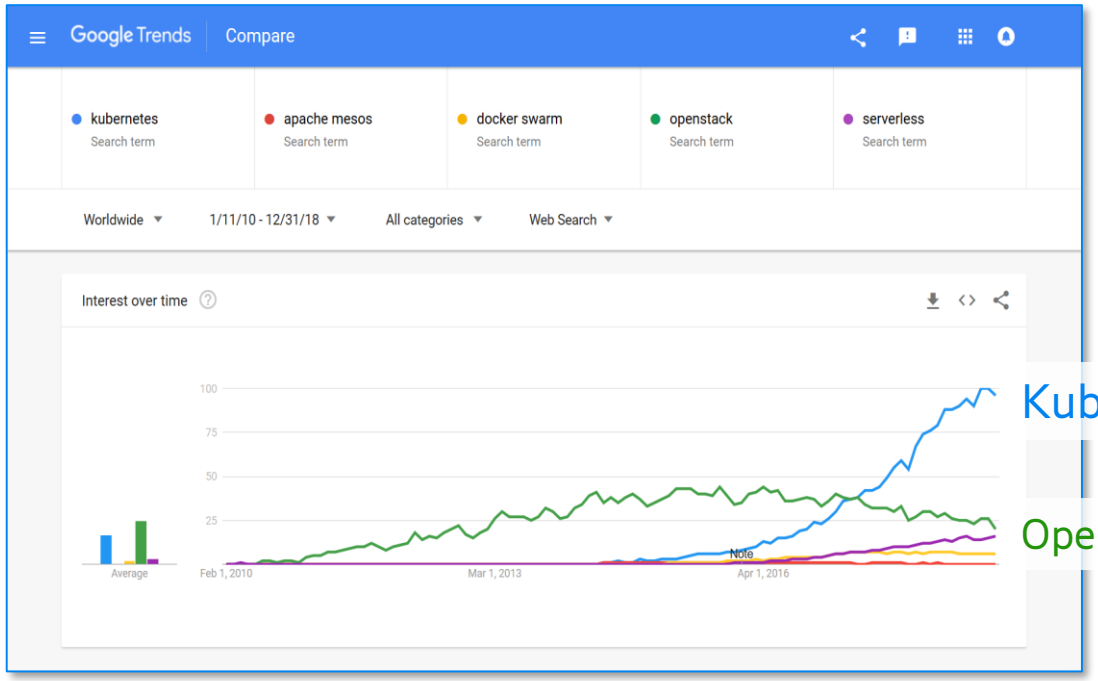

Kubernetes

OpenStack

Link

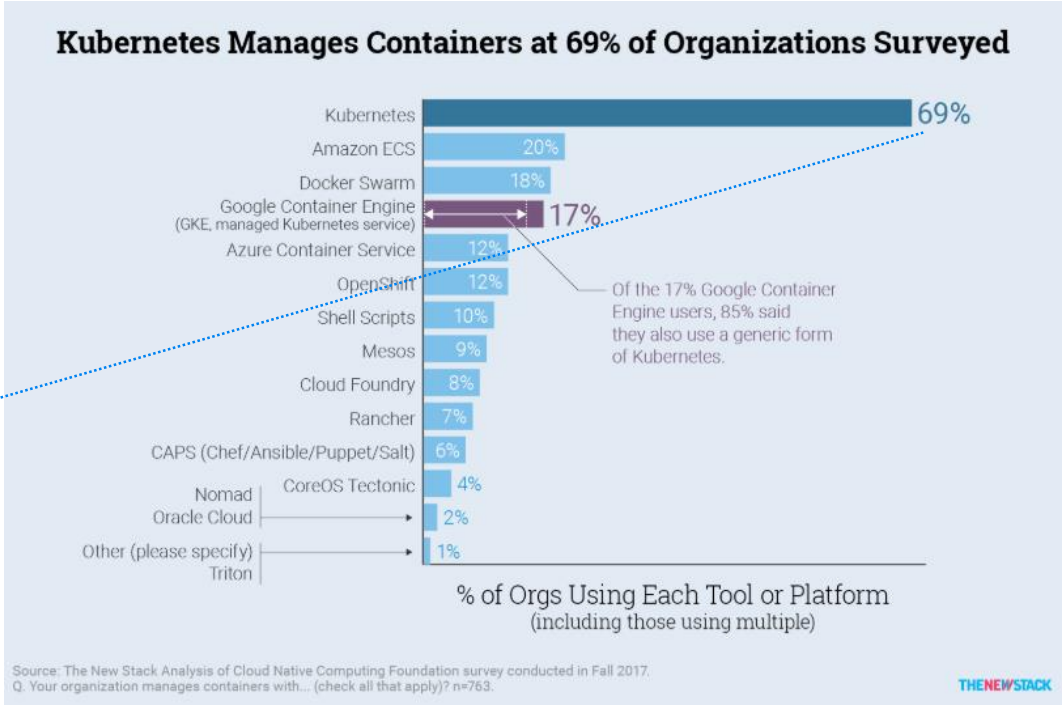

Cloud Native Orchestration – Kubernetes (donated by Google, CNCF)

Kubernetes Orchestration | Prometheus Monitoring | Envoy Service Proxy | CoreDNS Service Discovery | containerd Container Runtime

VMs vs Containers in telco space?

	VMs & IaaS	Containers & CaaS
Compute performance	+	+ +
I/O performance	o / + + (PCI-PT / SR-IOV)	+ / + + (Bare Metal / SR-IOV)
LCM operation efficiency	o	+ +
Platform maturity / ecosystem	+ +	+ + +
VNF package & deployment size	−	+
Speed of scale/heal	o	+ +
Workload isolation	+ +	o +
Support for cloud native design	o	+ + (using Kubernetes)

The Kubernetes ecosystem is evolving rapidly and ETSI and ONAP are adopting it

Technologies emerging: Kata Containers, FireCracker, gVisor... (+ virtlet, KubeVirt...)

Ericsson Cloud Core
Evolving to a cloud-native platform

Ericsson application design principles

- Run in any Cloud
- Decomposed SW - Leverage on Containers & Micro- services
- State optimized (stateless)
- Application resiliency - Fault tolerance in applications and services
- Fully Automated Lifecycle Management

Benefits

Speed
- Fast, low-cost introduction of new services in small scale

Scale
- From hundreds to millions of users
- Efficient operations
- Automation, no-touch operations

Legacy and new services
- Life-cycle independence (services/infrastructure)

Performance and capacity
- Optimized capacity throughput and resource utilization

Ericsson's 5G platform dual-mode Core

Cloud Native dual-mode Core

Ericsson 5G platform

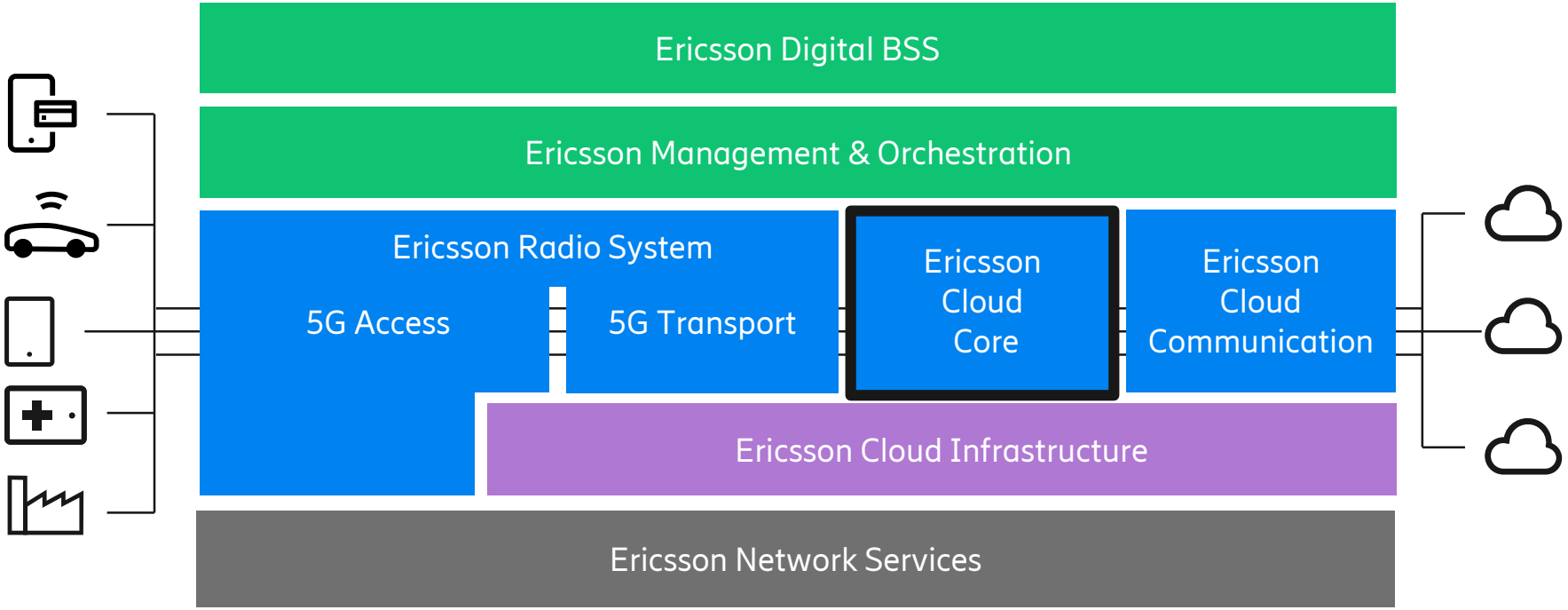

- **Digital BSS:** Real-time charging and billing, digital customer engagement
- **Management & Orchestration:** Network management, automation and orchestration of nodes, networks and capabilities
- **5G Access** RAN Compute and baseband, radio, and site
- **5G Transport:** Fronthaul, backhaul, edge, core
- **Cloud Core:** Packet core, unified data management & policy
- **Cloud Communication:** Communication services such as voice, video and messaging
- **Cloud Infrastructure:** NFV Infrastructure for distributed cloud environments
- **Network Services** Consulting, deployment, support, operations

Launching a new product family for future networks - Delivering a dual-mode 5G Cloud Core solution

Solution highlights

- Single platform for (5G) EPC and 5GC functionalities.
- Cloud native/microservice architecture.
- Automated and simplified O&M.
- High user plane performance and scalability.
- Network exposure capabilities for programmability.

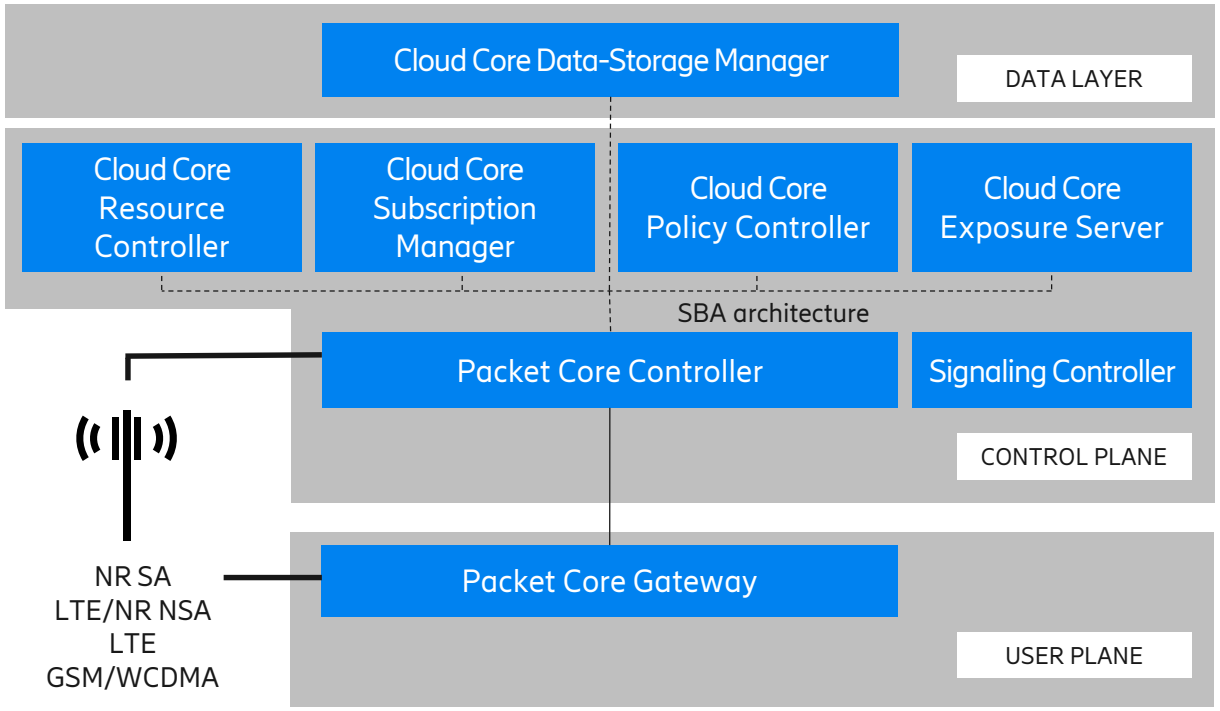

Cloud Native and microservice architecture

Following Cloud Native best practices:

- Agnosticity
- Decomposed SW and LCM
- Application resiliency
- State optimized design
- Orchestration and automation

Leveraging dozens of microservices that are common across whole Ericsson portfolio.

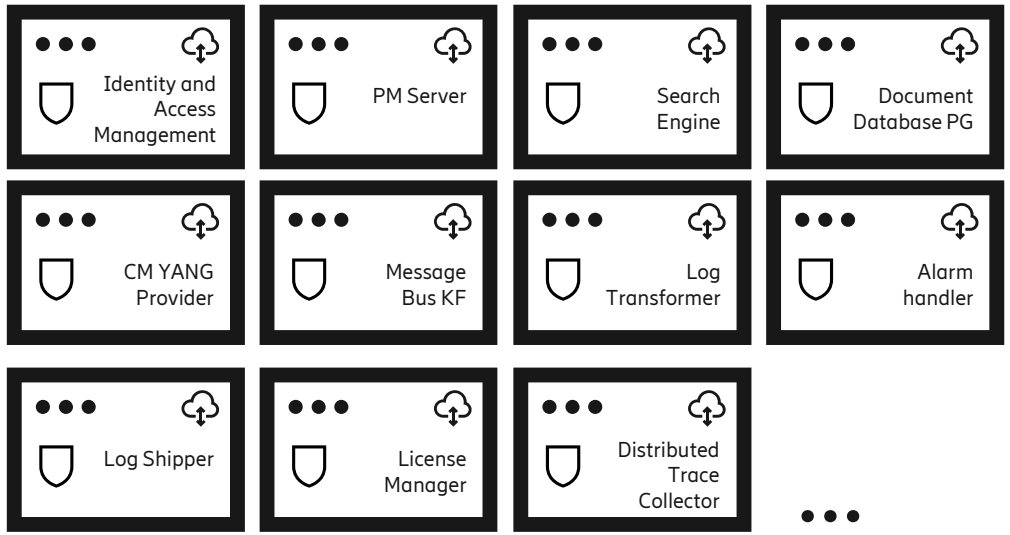

CI/CD with LCM of individual microservices improves software quality, minimizes risks, reduces costs and enables a faster TTM.

Learn more about Ericsson Cloud Native Applications *here*

☐ CAPEX
■ OPEX
☐ REVENUE

Cloud Native Packet Core Microservice Architecture

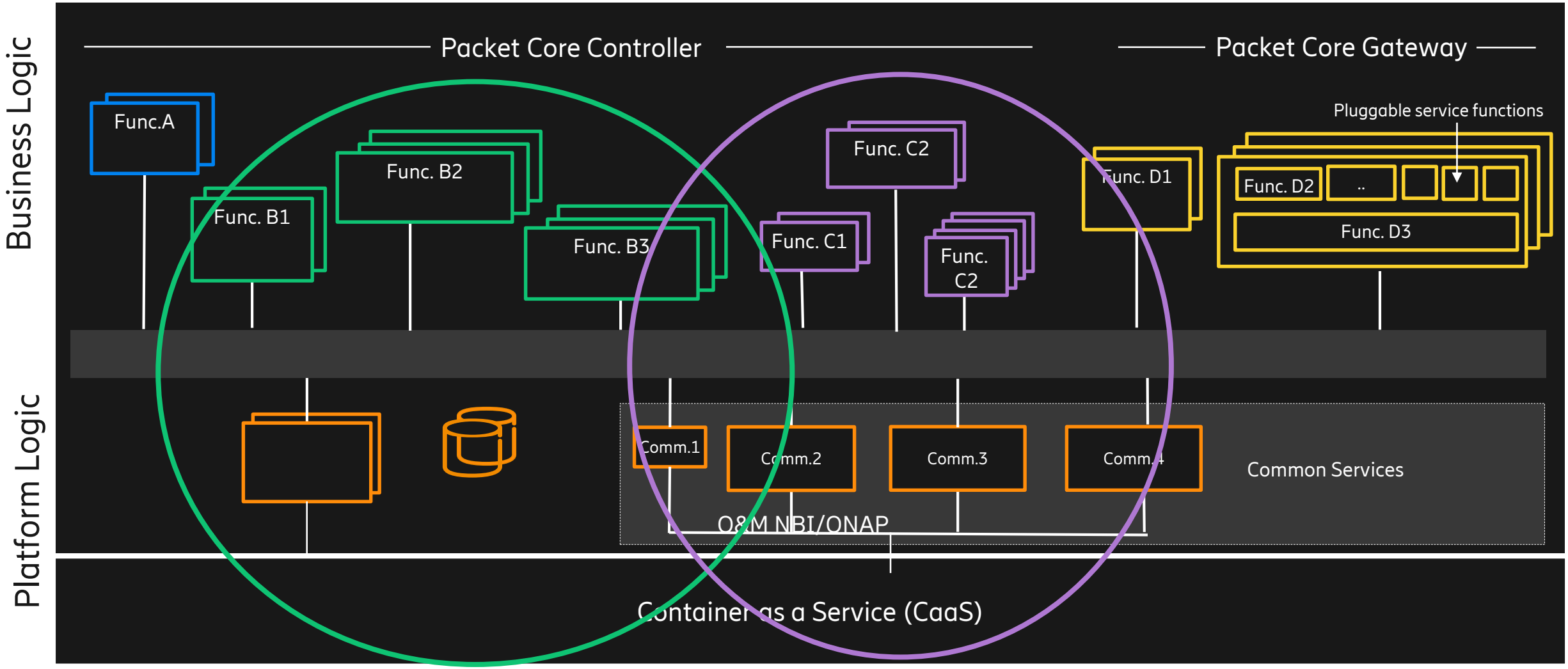

Cloud Native Packet Core Microservice Architecture

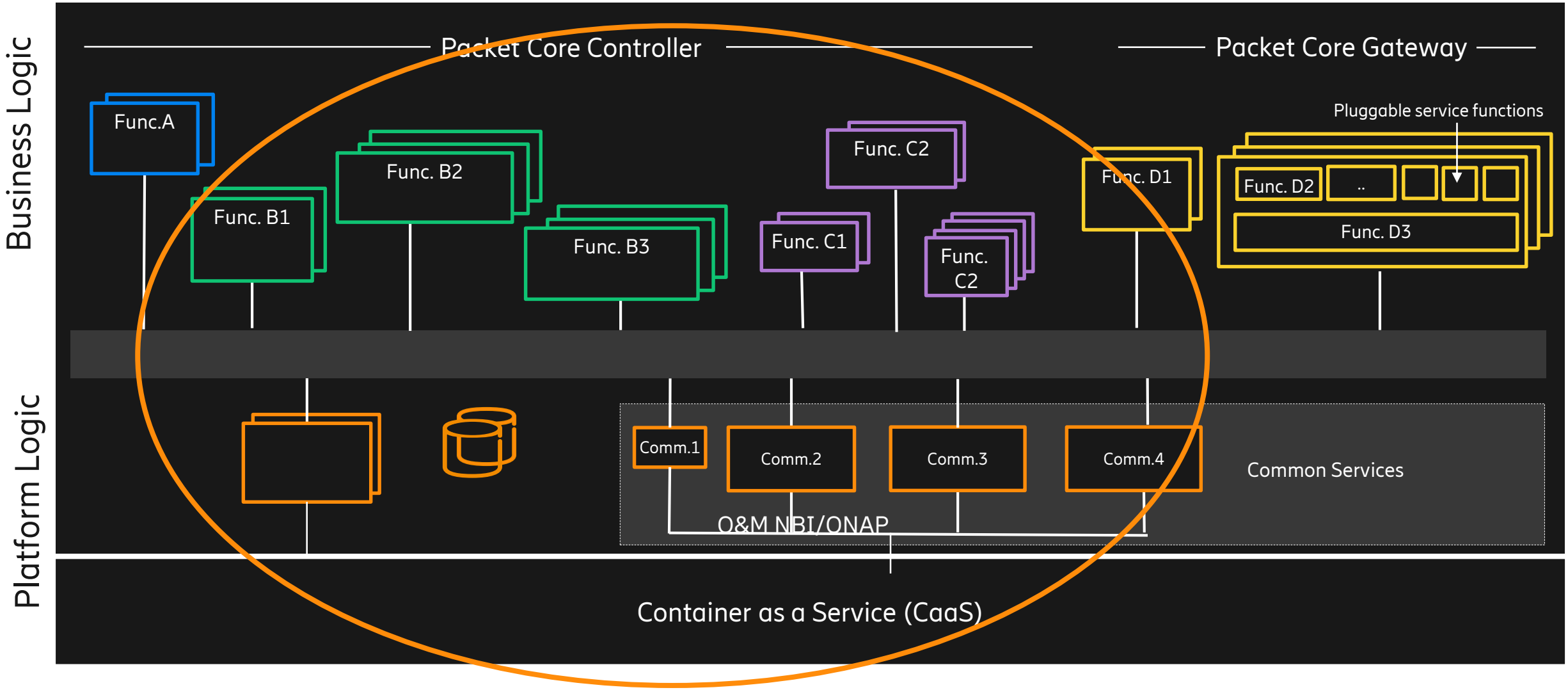

Ericsson's dual-mode 5G Cloud Core

Network Functions (NF) grouped per network services, allowing deployment flexibility and a smooth evolution to 5GC.

- Cloud native 5GC NFs microservice based.
- EPC NFs re-architected into cloud native with secured feature parity.
- Fully interworking with legacy networks and NFs.

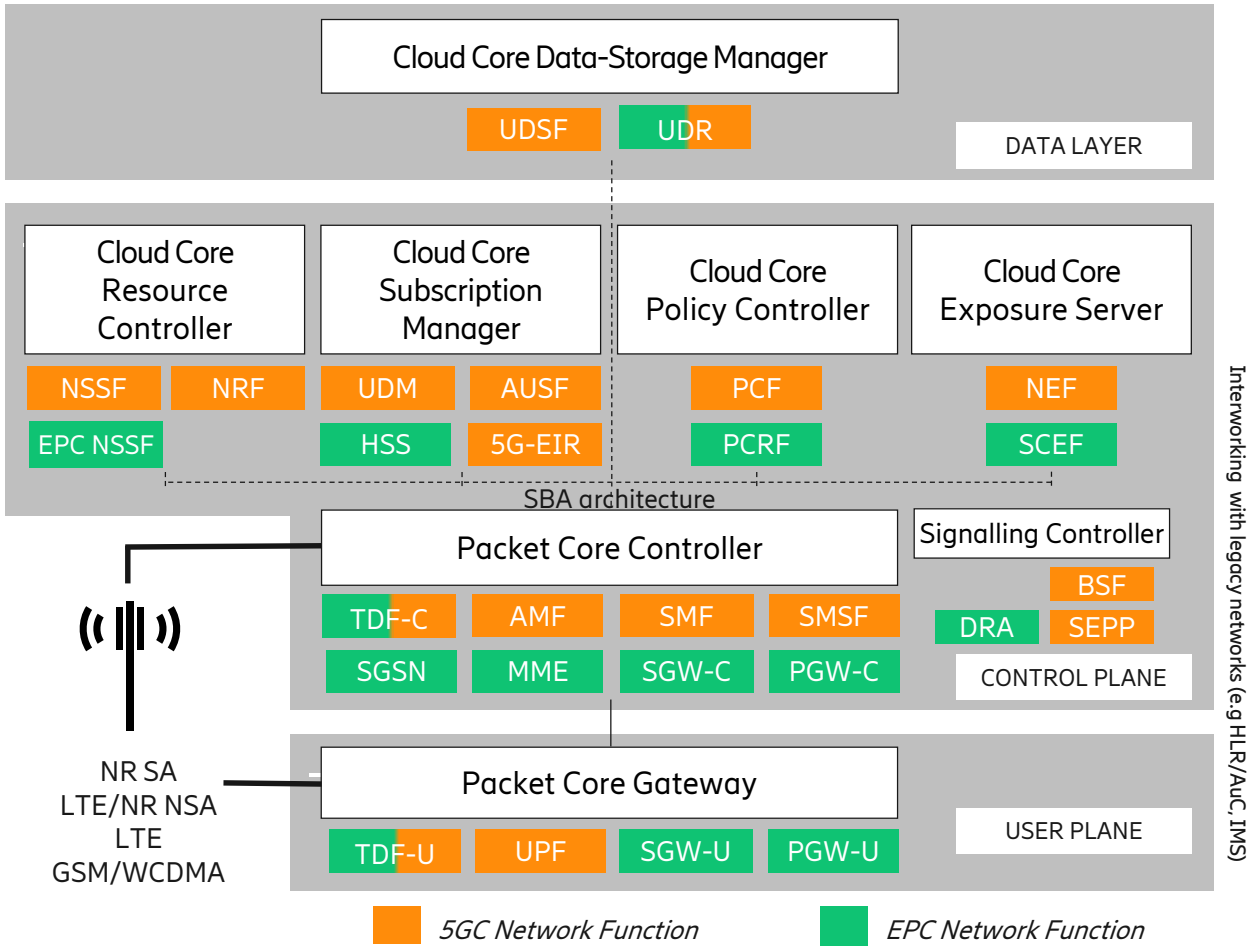

CAPEX
OPEX
REVENUE

EPC and 5GC will co-exist for many years

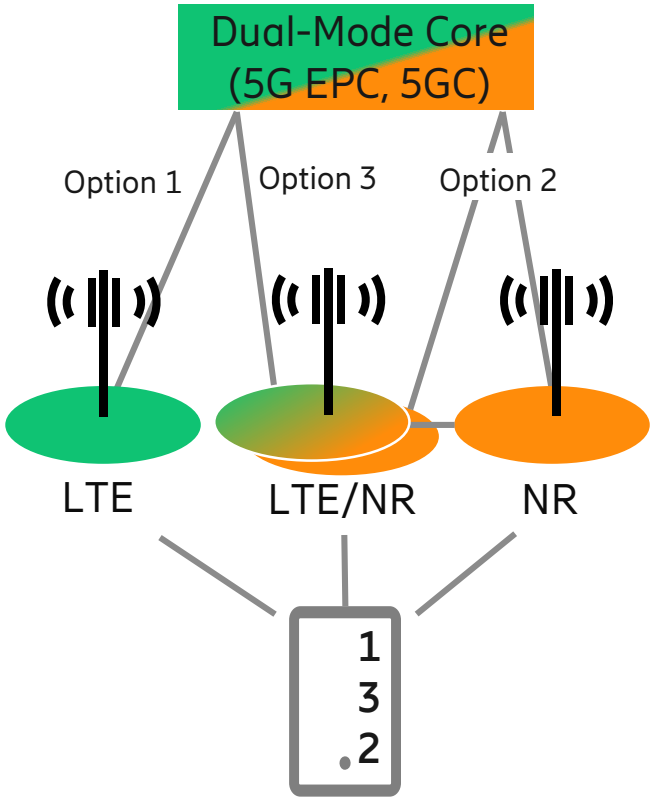

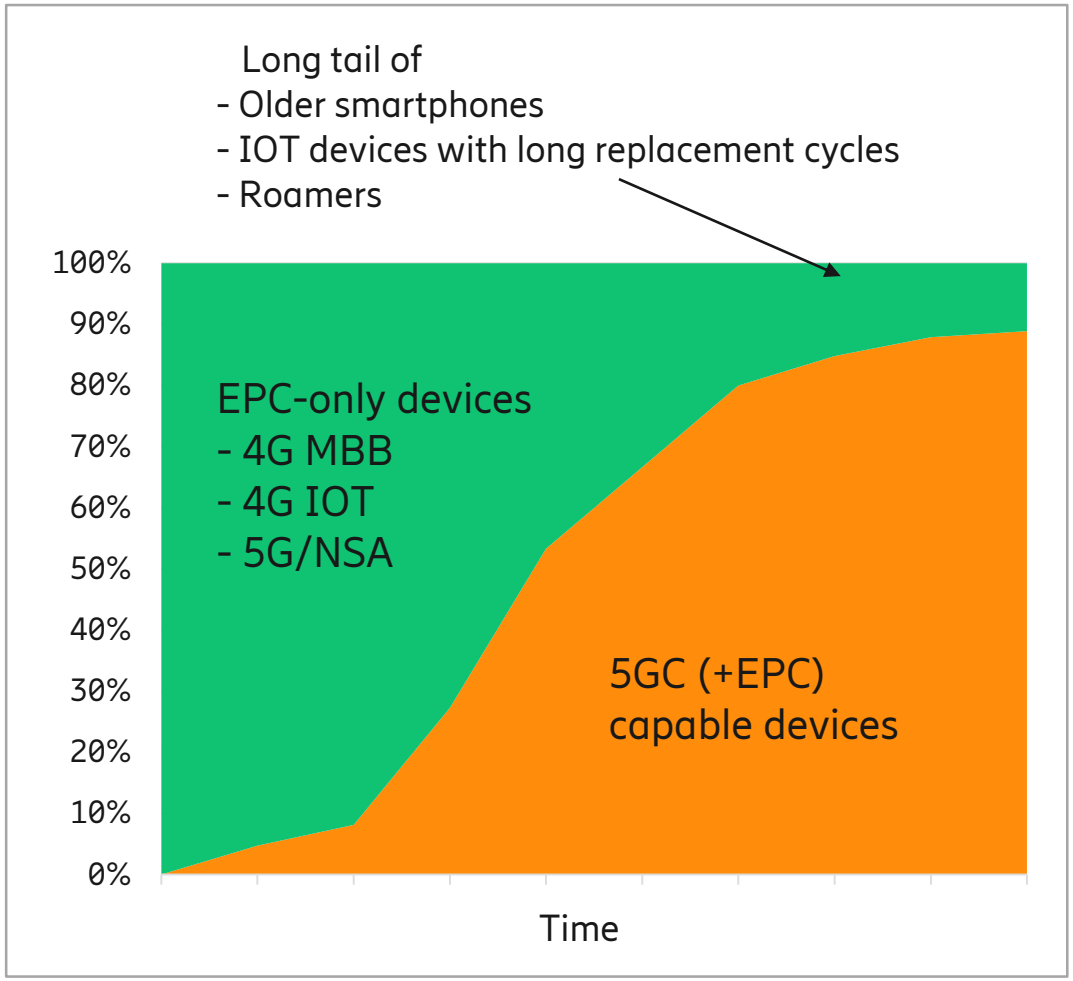

4G 5G

5G Dual-mode Core deployment scenarios

Examples

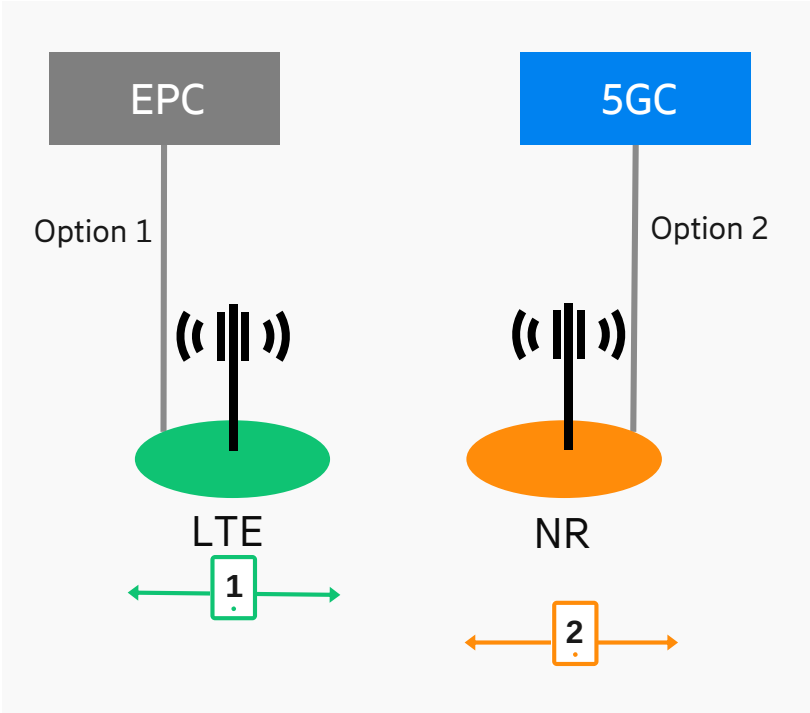

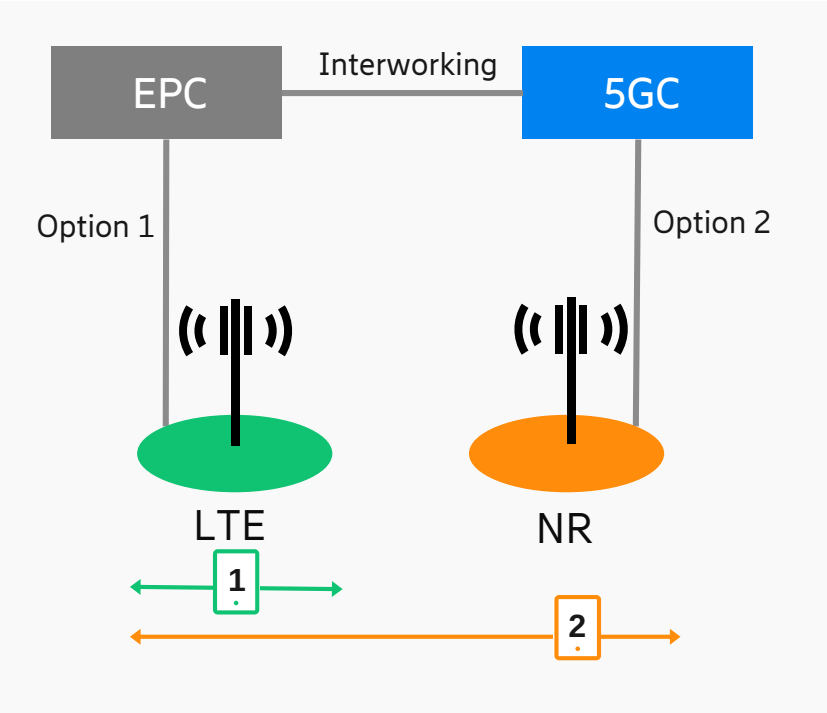

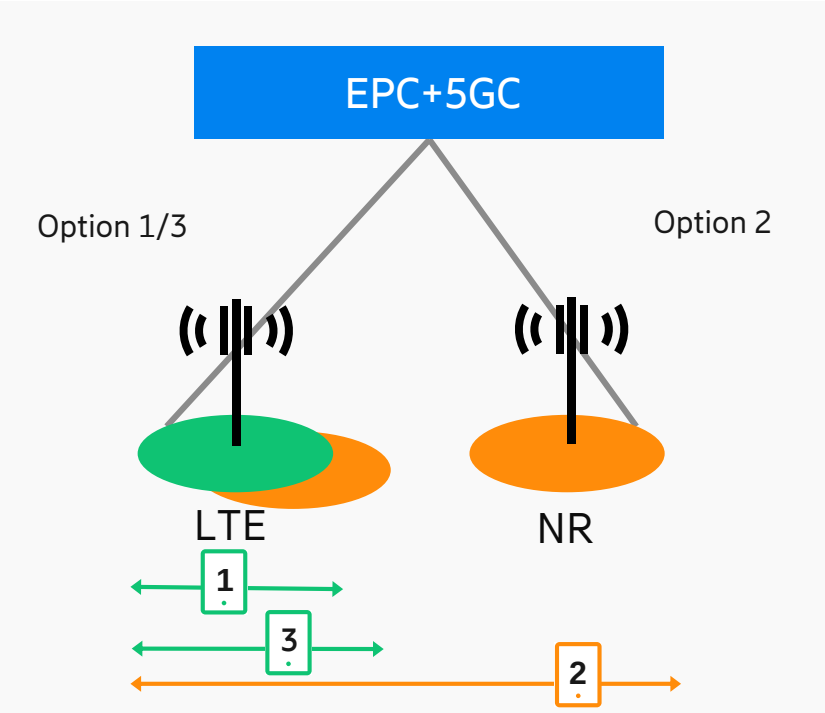

Overall dual-mode 5G Cloud Core solution benefits

		Ericsson's dual-mode 5G Cloud Core		
Optimized TCO	Manage growth with **CAPEX** efficiency	**Up to 20% savings in infra-structure** with dual-mode cloud native operations	**30% less user plane footprint** with efficient service chaining	**5G peak rates of 20 /10 Gbps per UE** in loaded system
	Reduce **OPEX** and operational inefficiencies	**Up to 90% reduced OPEX for SW upgrades** with Ericsson CI/CD and cloud native applications	**Up to 75% cost savings in network and O&M integration** when expanding with new NFs	
Revenue growth	Grow **revenue** with agility and speed	**+35% in revenue** enabled by network slicing*	**+2% ARPU** enabled by Network Exposure	

*Source: Ericsson and BT study on Nework Slicing

Why Ericsson Cloud Core

Dual-mode

- One Software System for (5G) EPC & 5GC
- Flexible Deployment Models
- Simultaneous support for LTE, NR-NSA & NR-SA

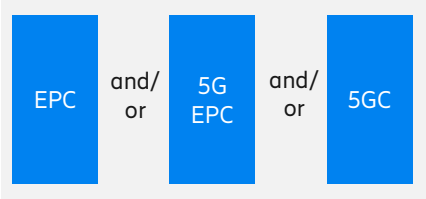

Future-proof

- Cloud-native platform
- VNF lifecycle automation
- CI/CD support

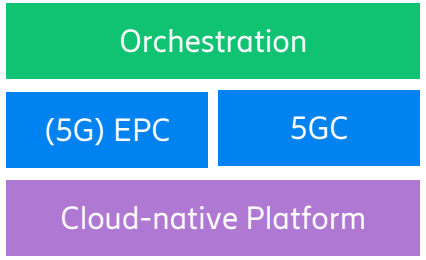

Packet Core

- One common UP for EPC & 5GC
- High performance UP
- CUPS with independent UP/CP scaling
- "Any device, any access"

Unified Data Management & Policy

- Data storage for all access types (2G-5G)
- Policy mgmt. for users & slices
- Network exposure with flexible SBA workflows

ERICSSON | LG