컨테이너 기반 코어 네트워크

박상용 팀장

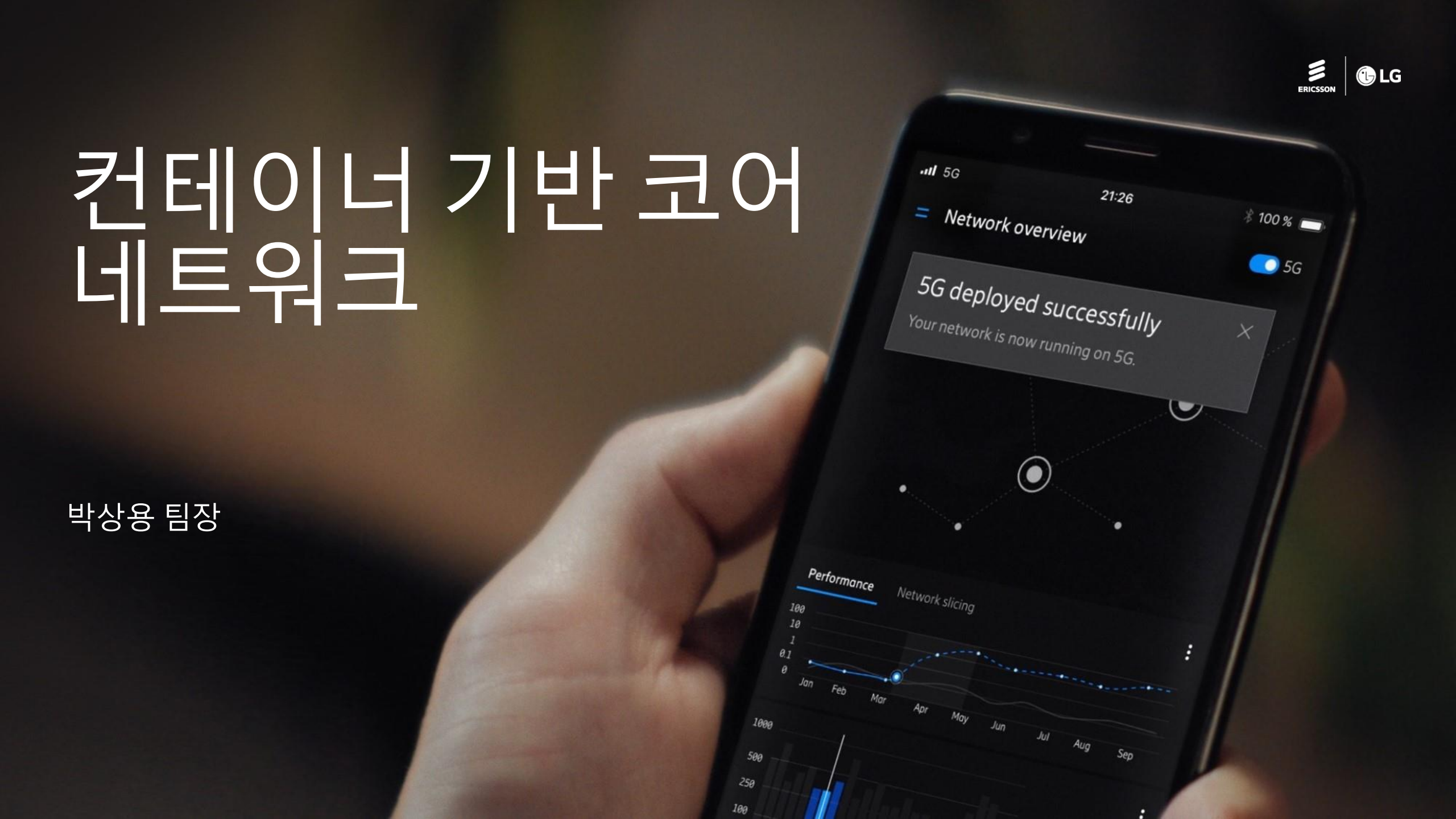

Agenda

1. 5G Core and 5G NR SA
2. Ericsson Cloud Native 5GC
3. Ericsson Cloud Infrastructure
4. Further Considerations on 5G

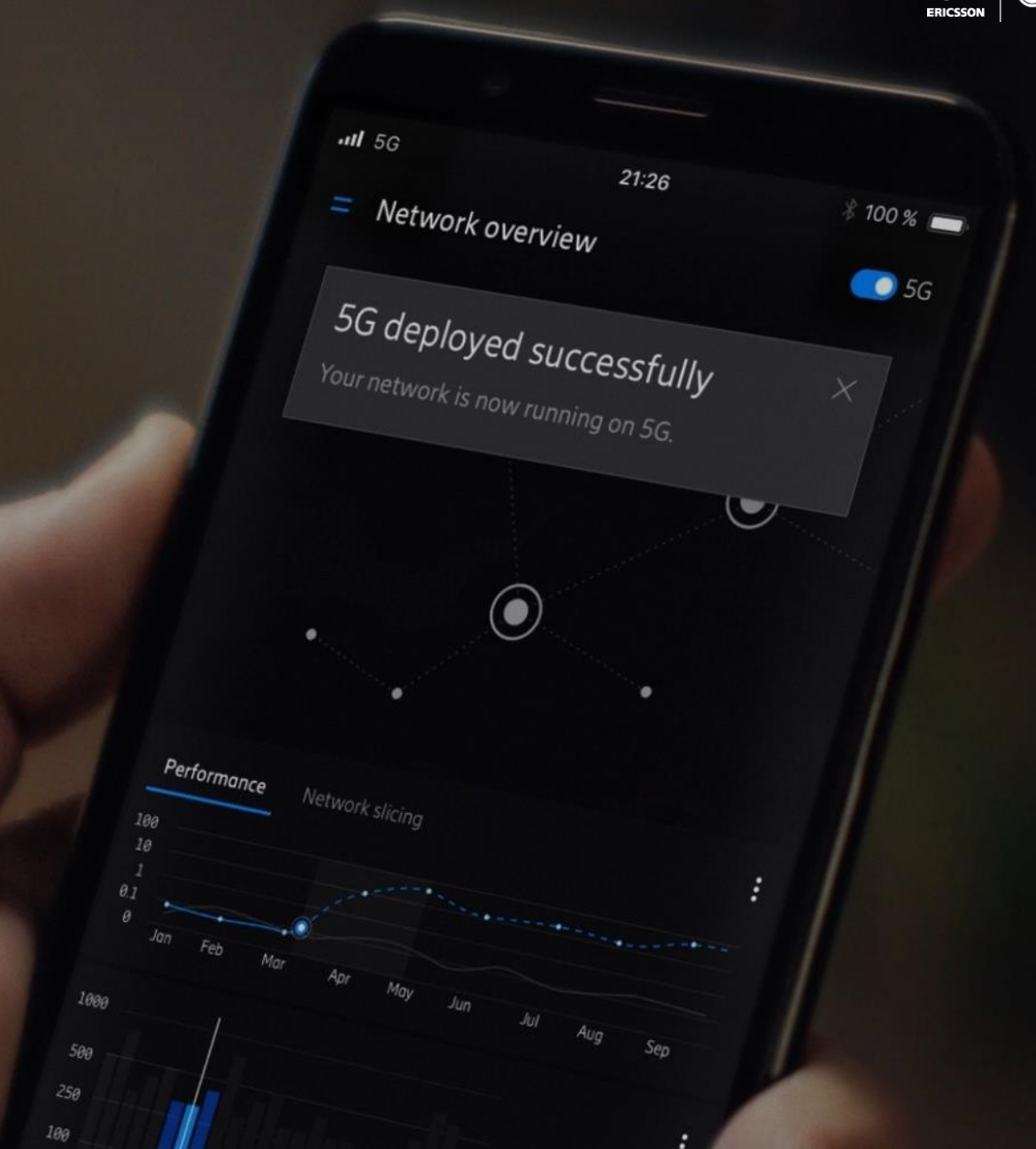

1. 5G Core and 5G NR SA
2. Ericsson Cloud Native 5GC
3. Ericsson Cloud Infrastructure
4. Further Considerations on 5G

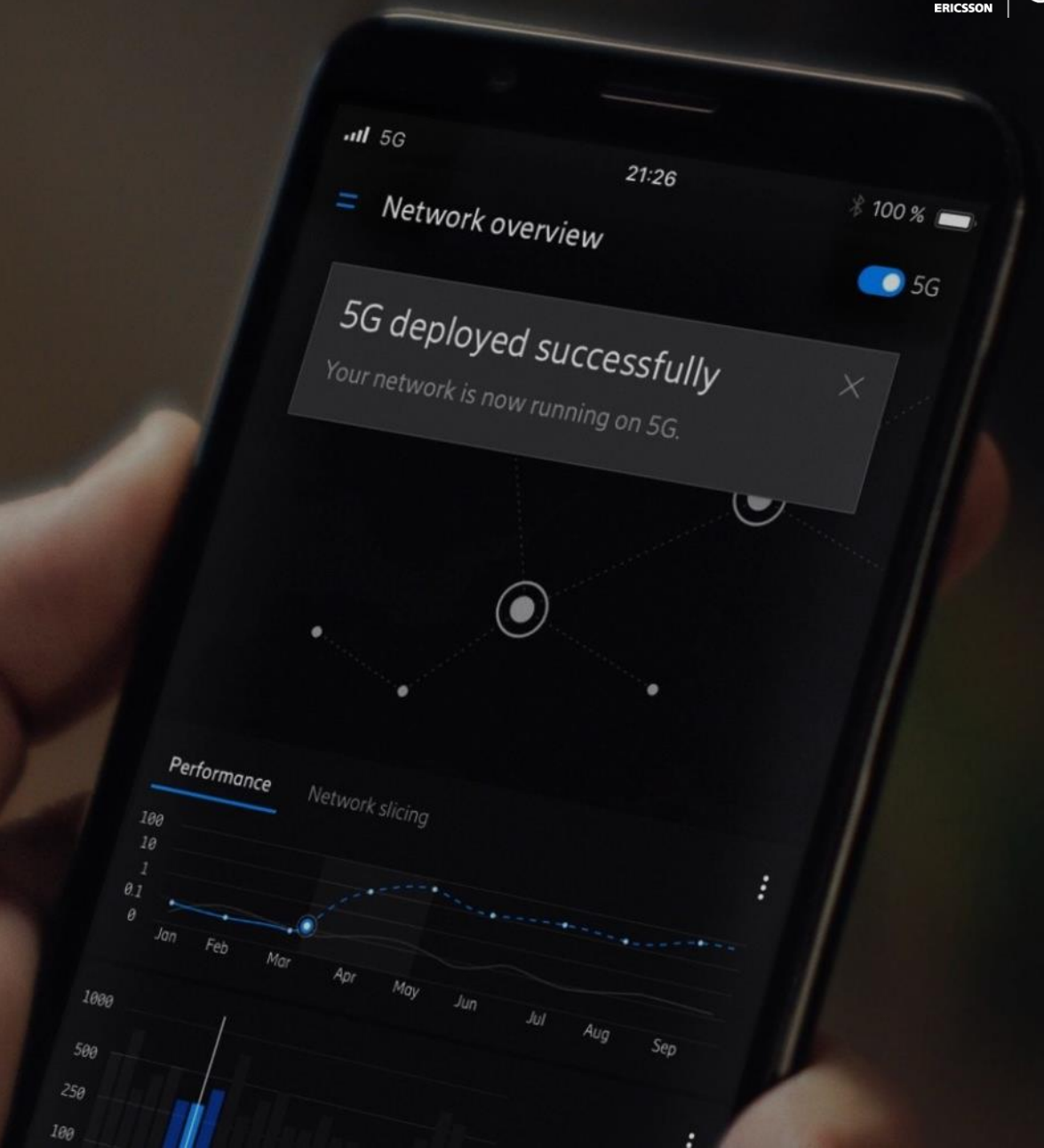

5G Core architecture overview

Mapping the EPC functions to new 5G CN functions

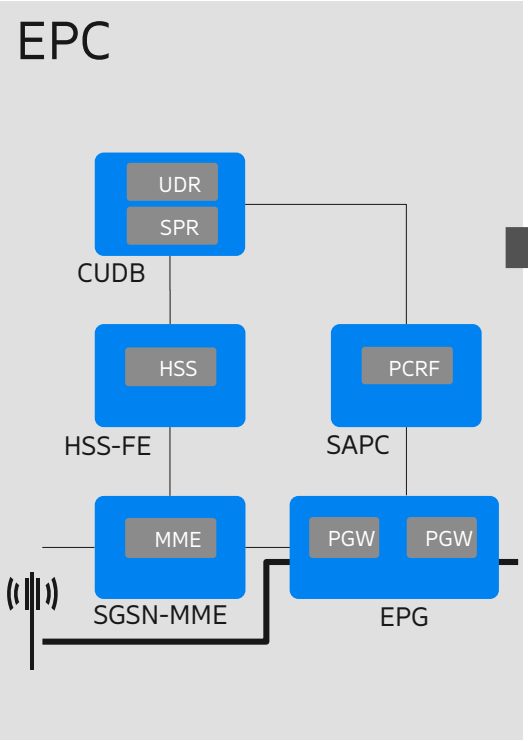

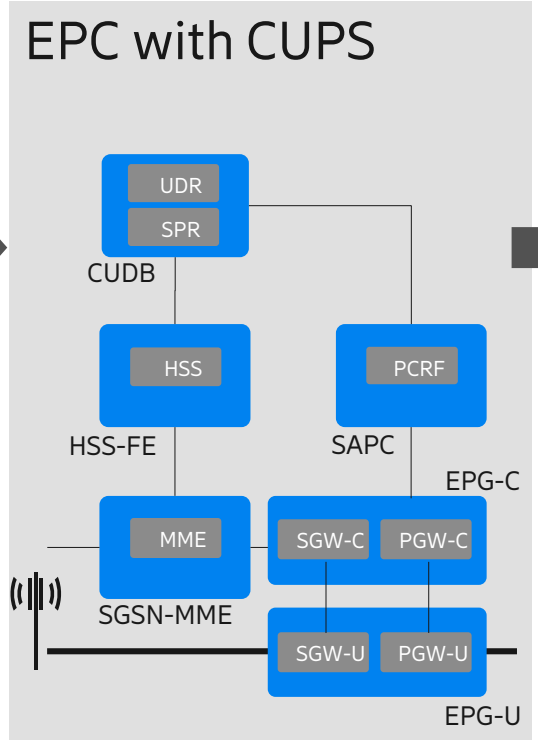

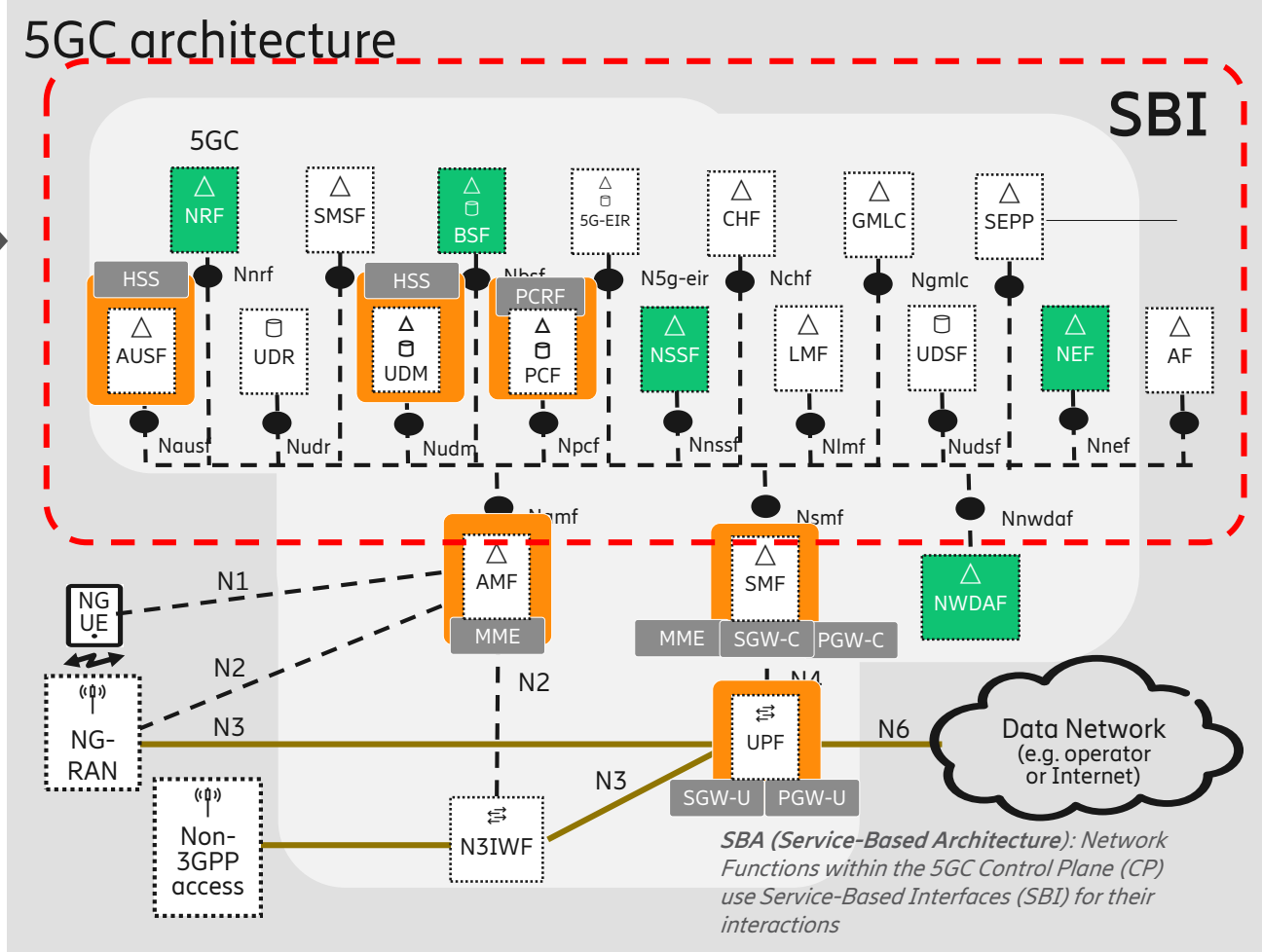

5G Core and 5G NR SA

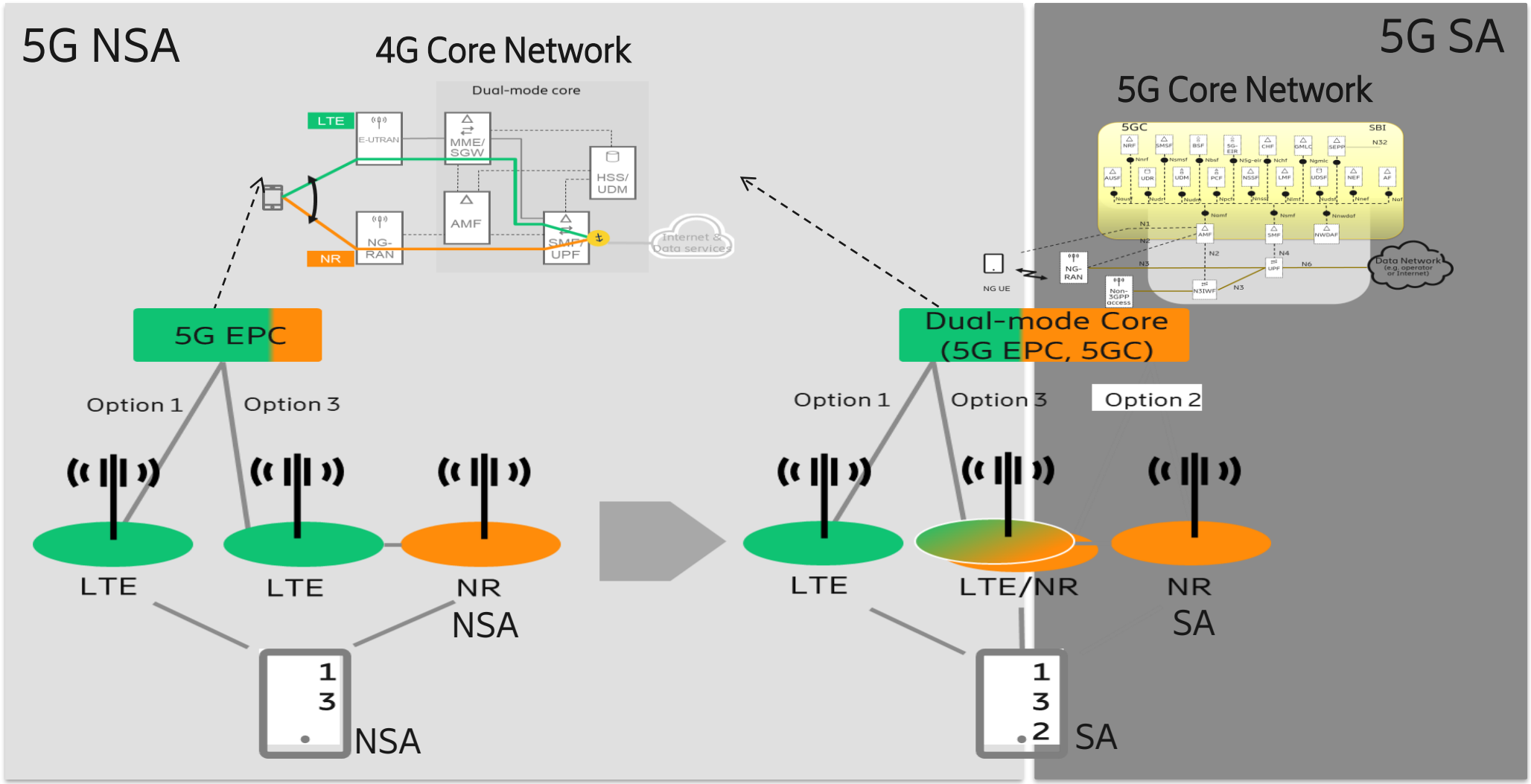

Key Aspects for 5GC

One Core network

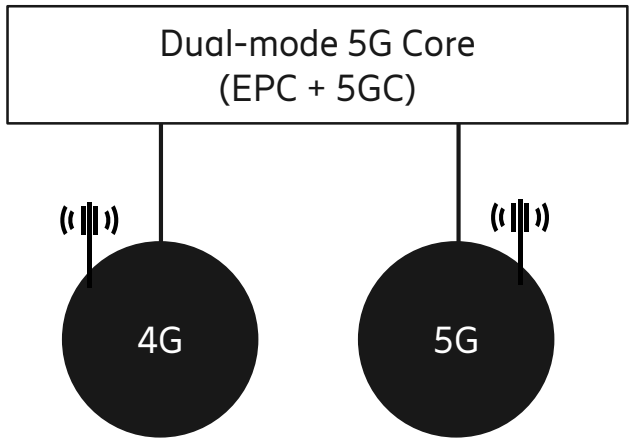

Manage growth with CAPEX efficiency

Cloud Native

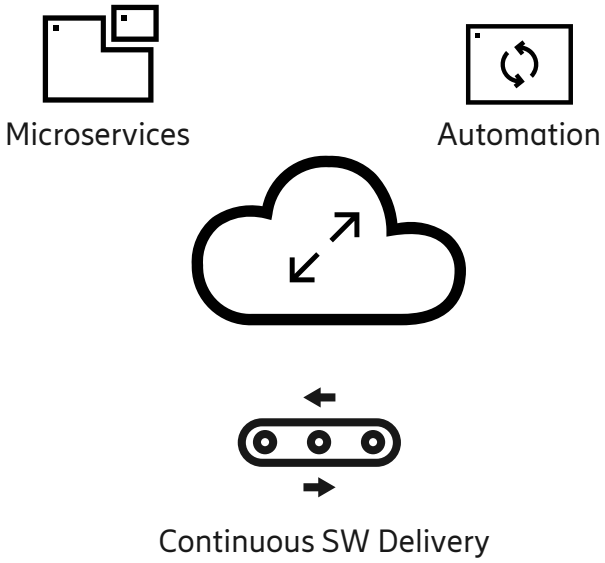

Reduce OPEX and operational inefficiencies

B2B opportunities

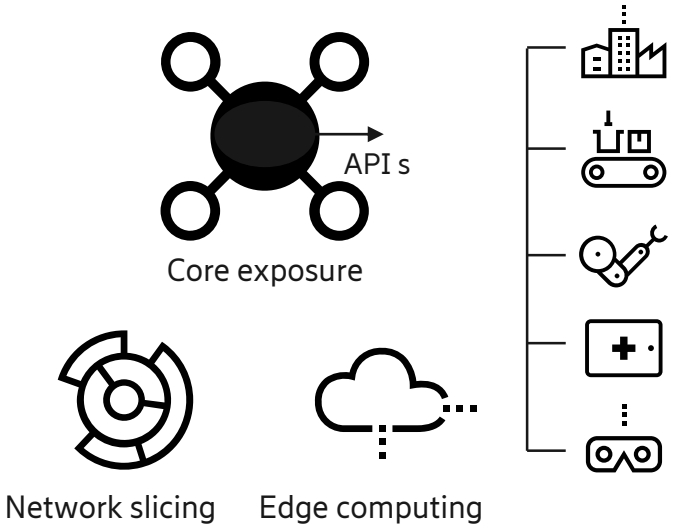

Grow revenue with agility and speed

1. 5G Core and 5G NR SA
2. Ericsson Cloud Native 5GC
3. Ericsson Cloud Infrastructure
4. Further Considerations on 5G

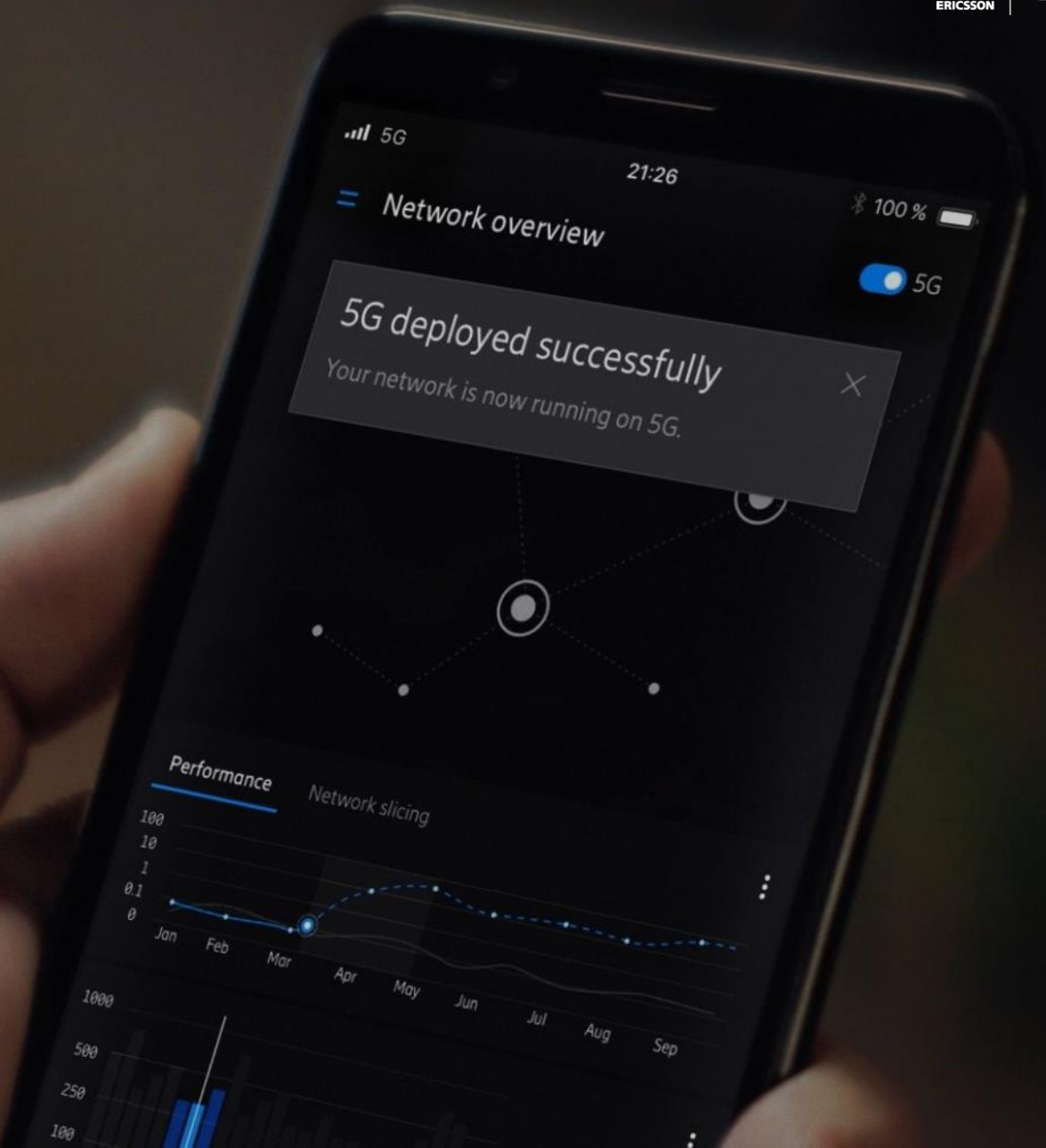

Ericsson Dual-mode 5G Cloud Core

Foundation + Microservices/Containers, Flexible Packaging and Deployments, DevOps = Products (VNF's)

Cloud Native SW design

3GPP 5G Core support (NSA / SA NR)

Service Based Architecture

24 NF / ~160 microservices

8 Products

Inside Ericsson's dual-mode 5G Core

Network Functions (NF) grouped per network services

— Microservice based.

— Fully interworking with legacy networks and NFs.

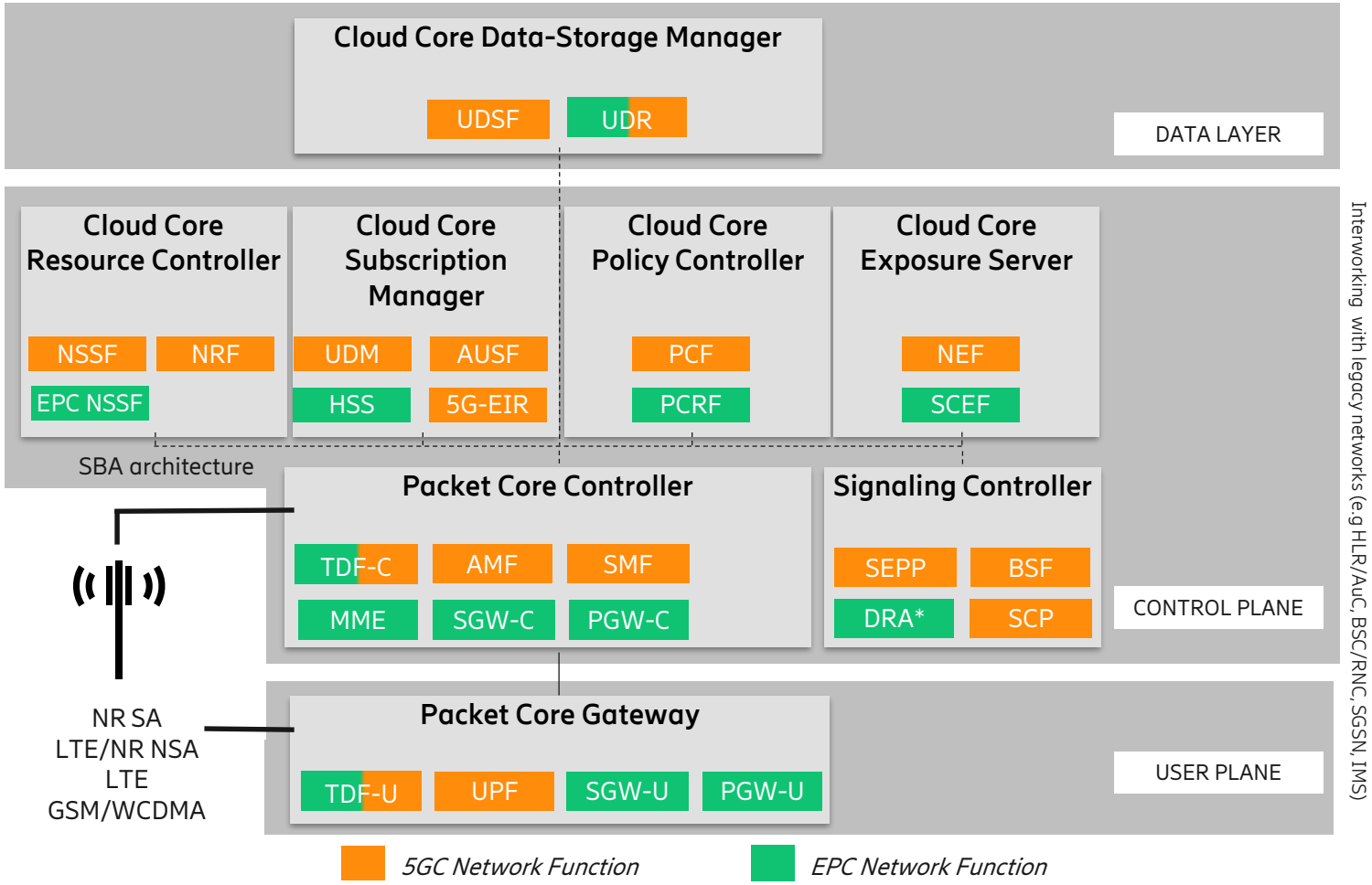

** DA and DEA functions also supported.*

CAPEX
OPEX
REVENUE

1. 5G Core and 5G NR SA
2. Ericsson Cloud Native 5GC
3. Ericsson Cloud Infrastructure
4. Further Considerations on 5G

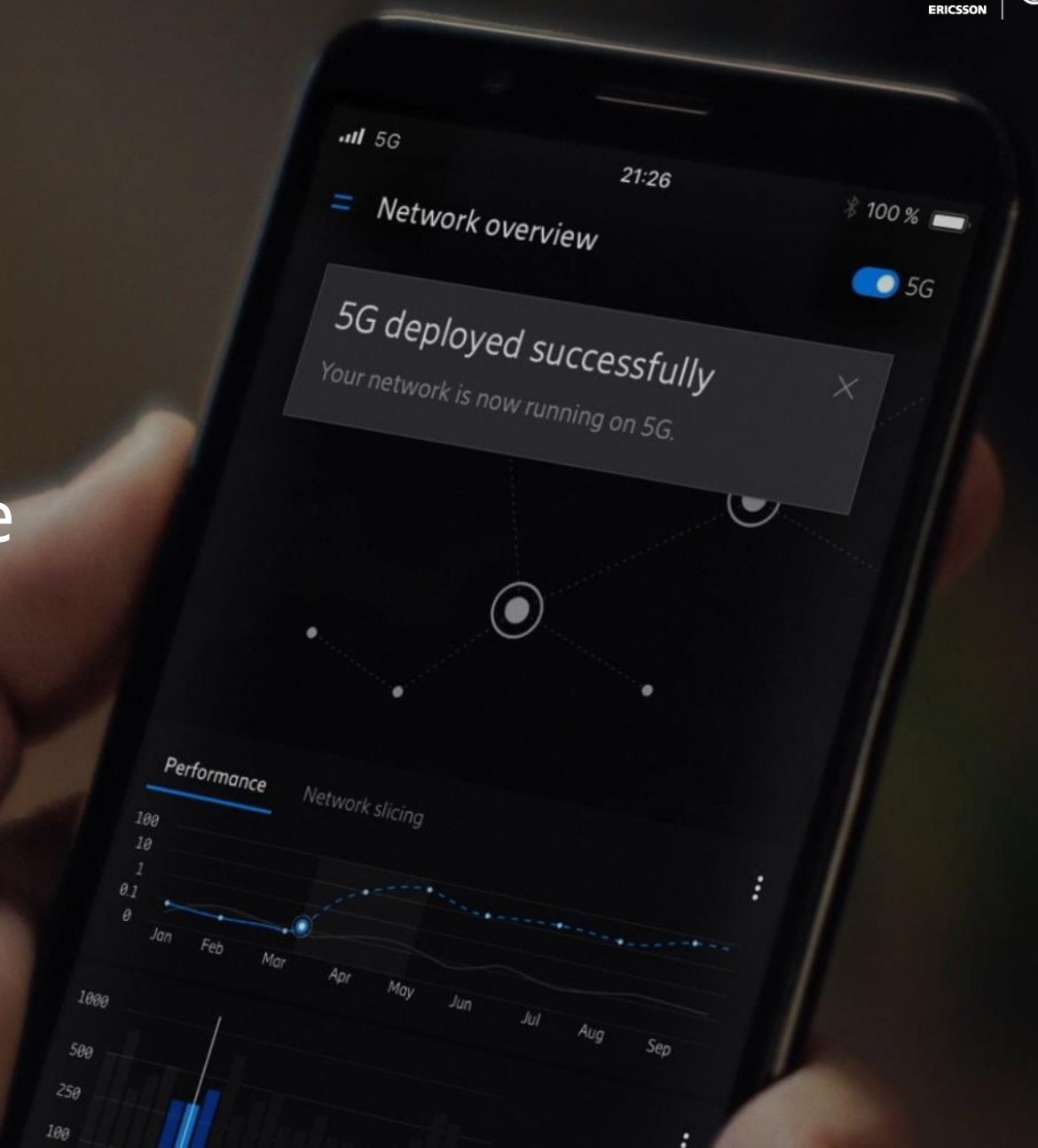

Cloud Container Distribution (CCD) architecture

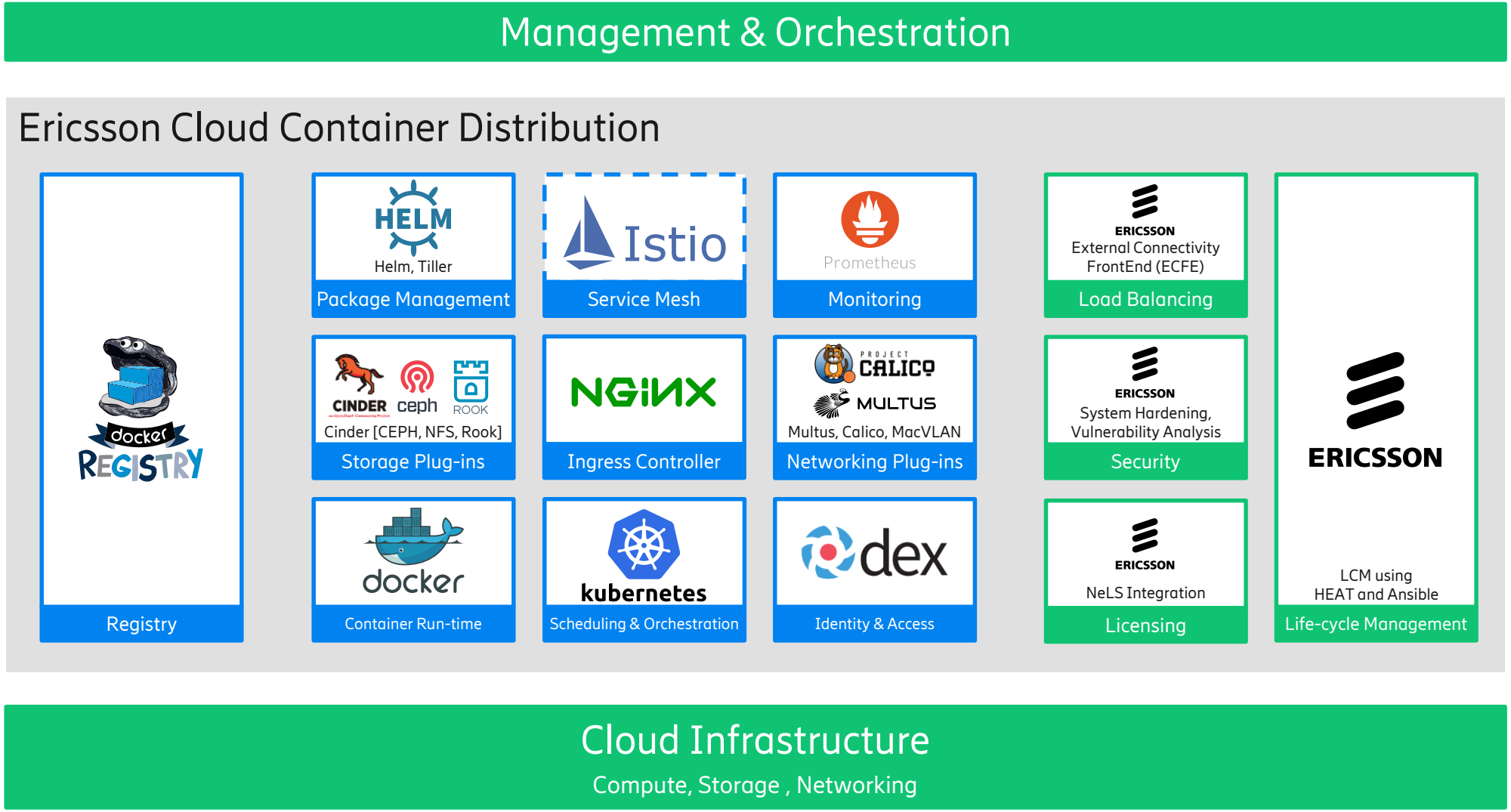

Ericsson software defined infrastructure

- Efficient infrastructure management – Full automation
- Multi virtual performance optimized datacenter (vPOD)s
- Telecom grade characteristics

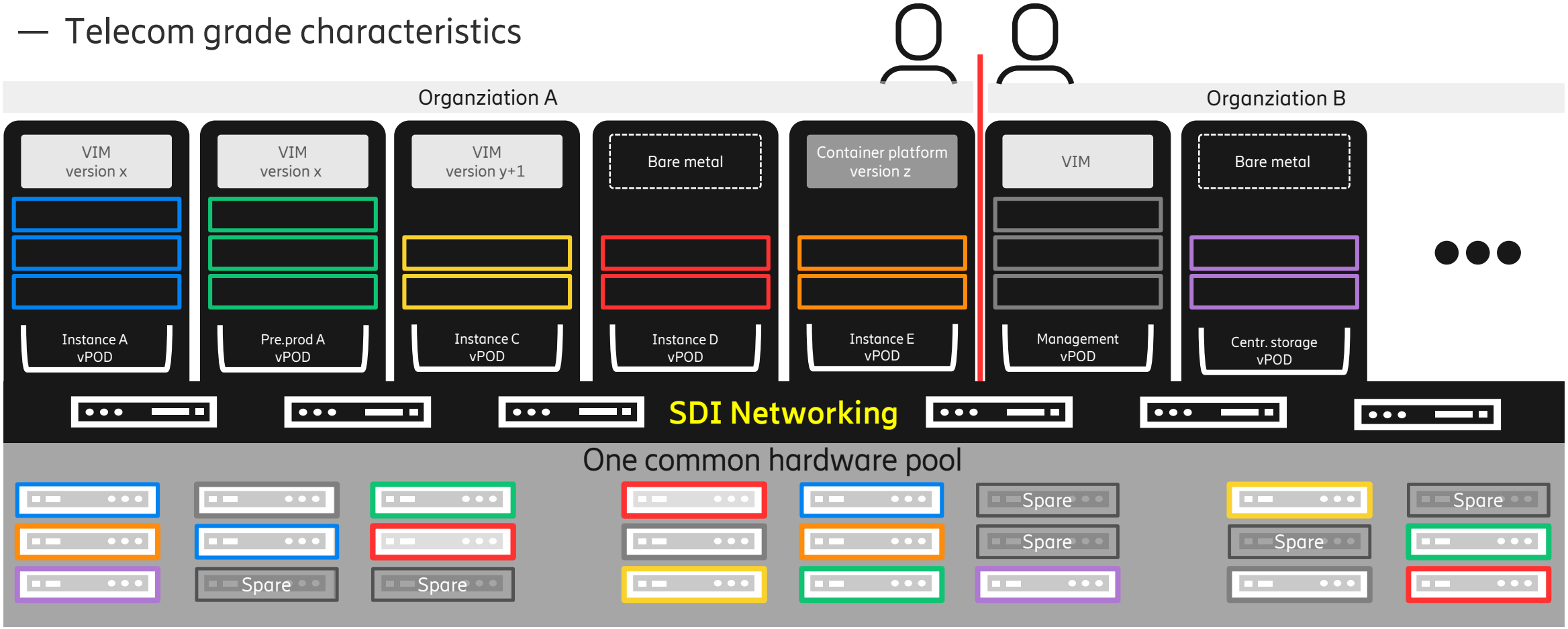

NFVI Evolution to Cloud Native Infrastructure

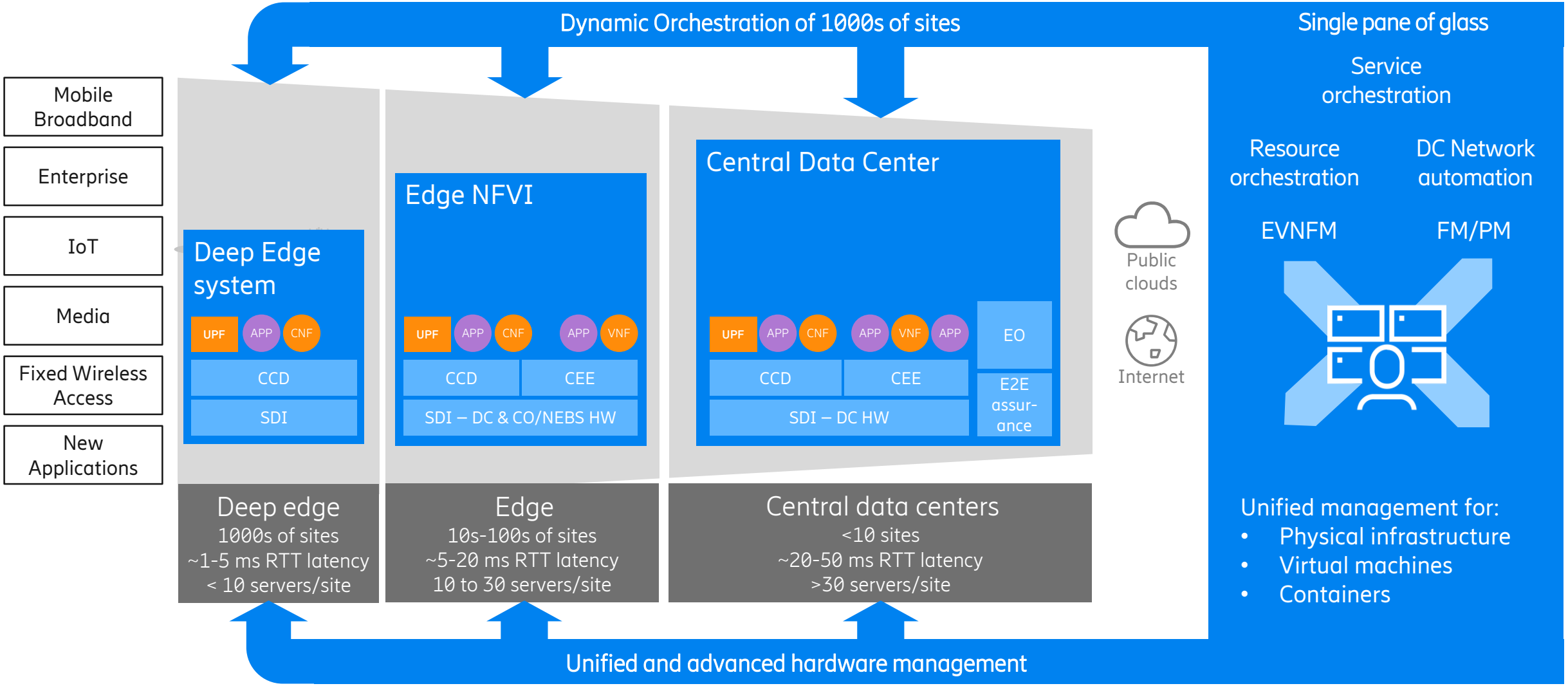

1. 5G Core and 5G NR SA
2. Ericsson Cloud Native 5GC
3. Ericsson Cloud Infrastructure
4. Further considerations

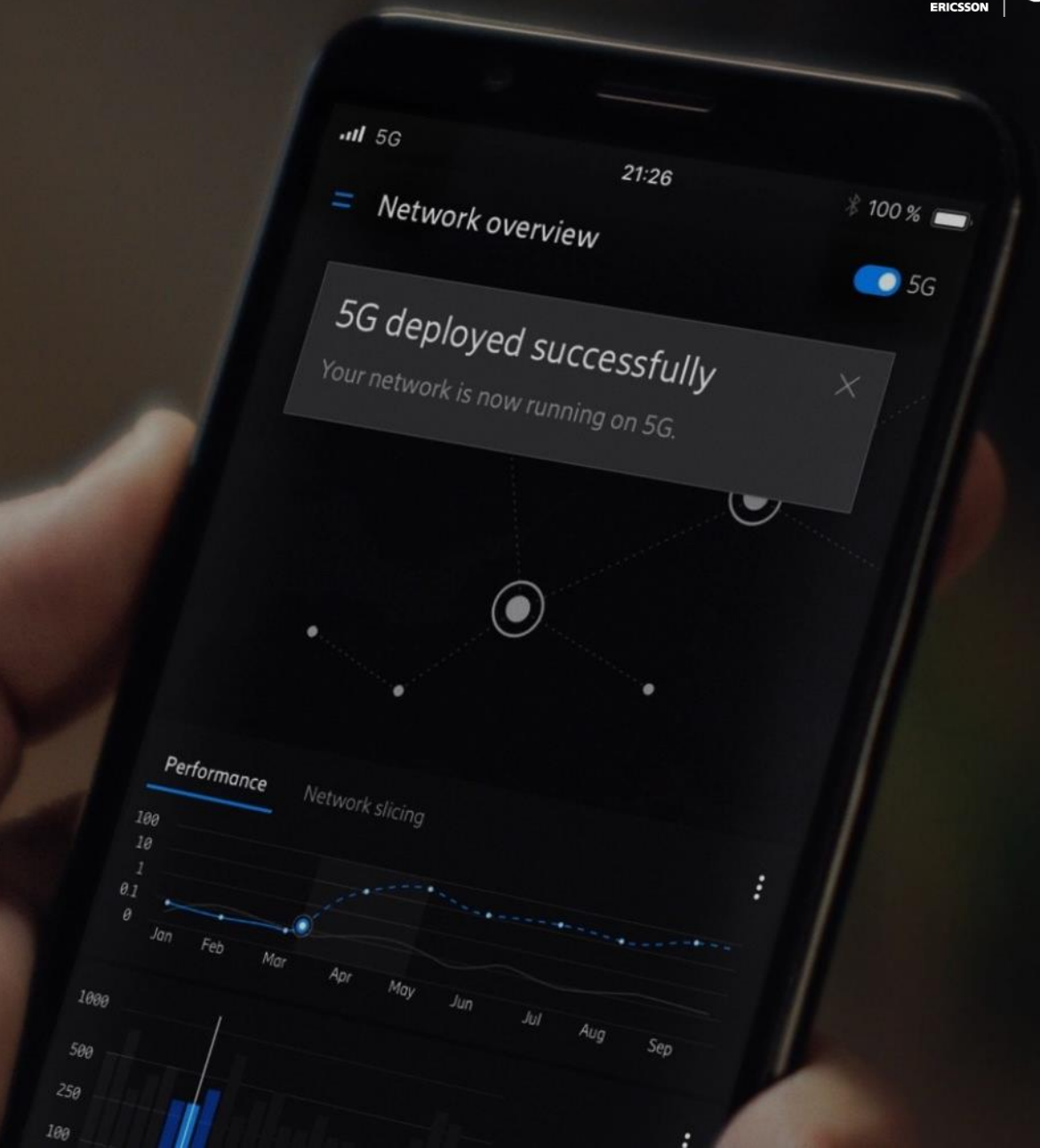

5GC SW Probes

- 2 different approaches for data acquisition

Traditional data collection approach for NFV

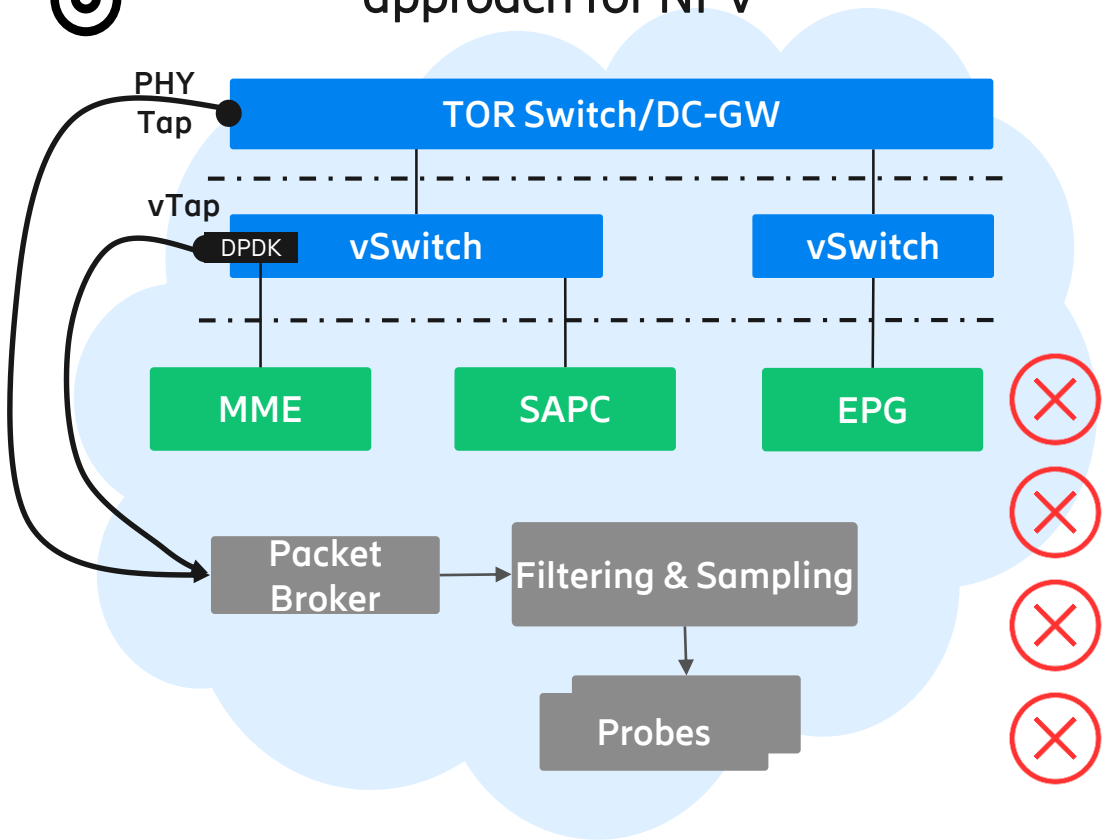

New data collection approach for NFV

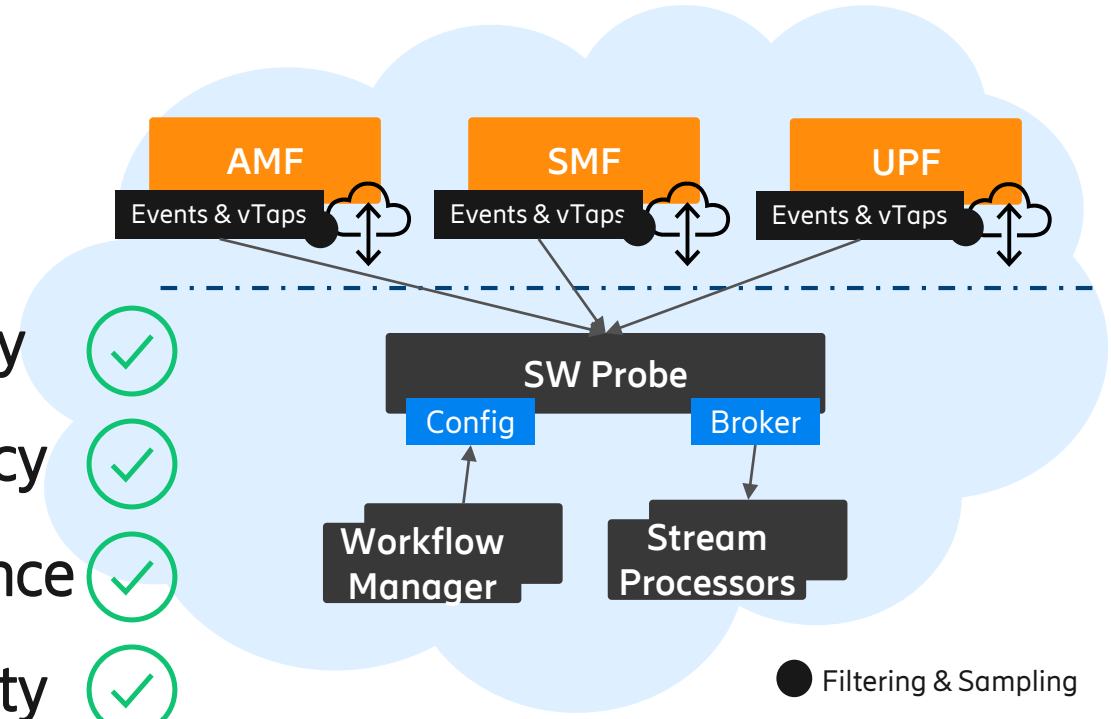

Security	✓
Efficiency	✓
Intelligence	✓
Simplicity	✓

Software Delivery Pipeline
- Automating the entire flow - CI/CD

- Improved software quality, reduced project and OPEX cost and faster TTM.
- Avoids larger and riskier changes with LCM of individual microservices.
- Better and faster feedback cycles.
- Simpler design on app level.
- New releases and microservices taken into service faster and cheaper.

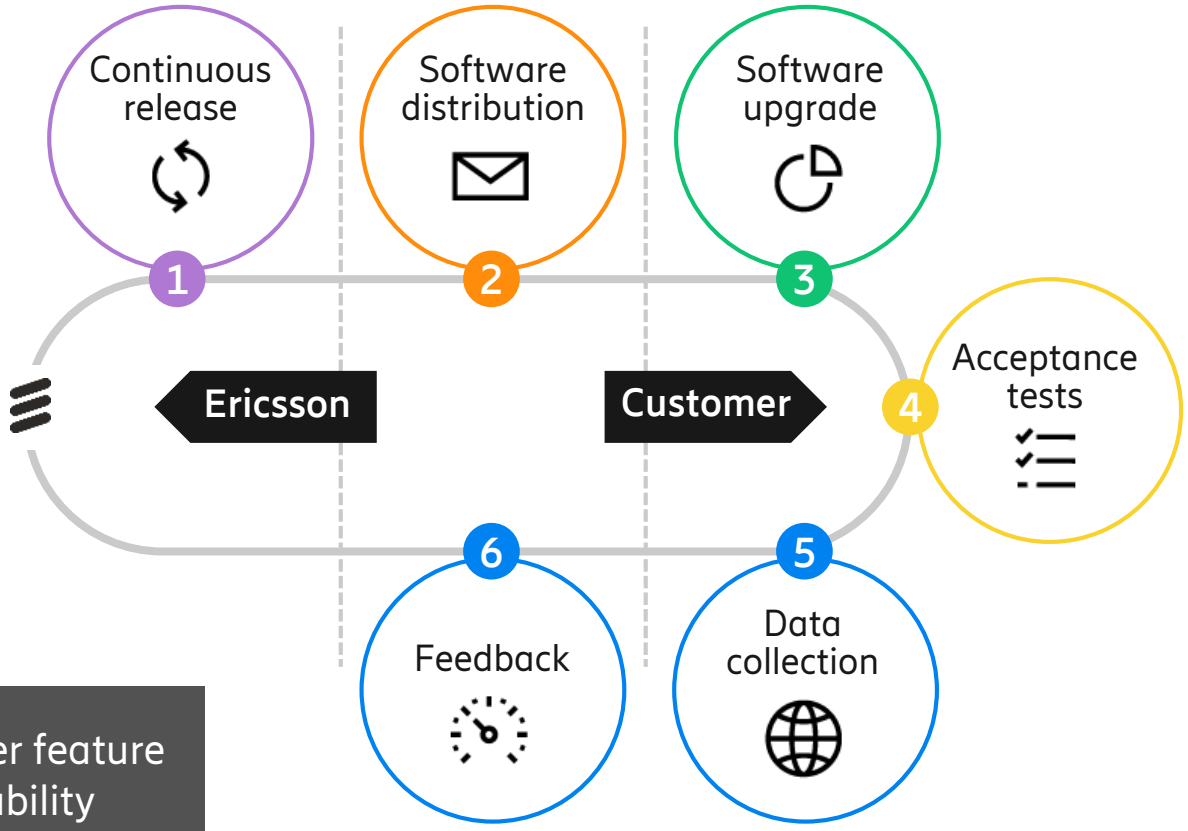

>60% OPEX savings for SW upgrades	4x higher deployment recurrency	50% faster feature availability

Gi LAN Consolidation

Situation today → Solution

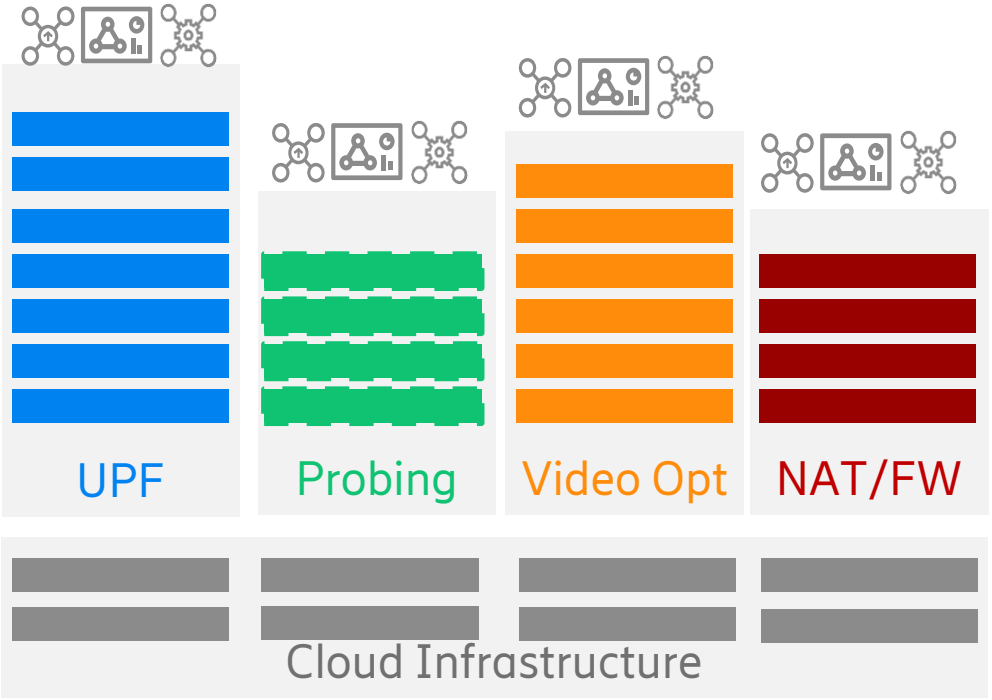

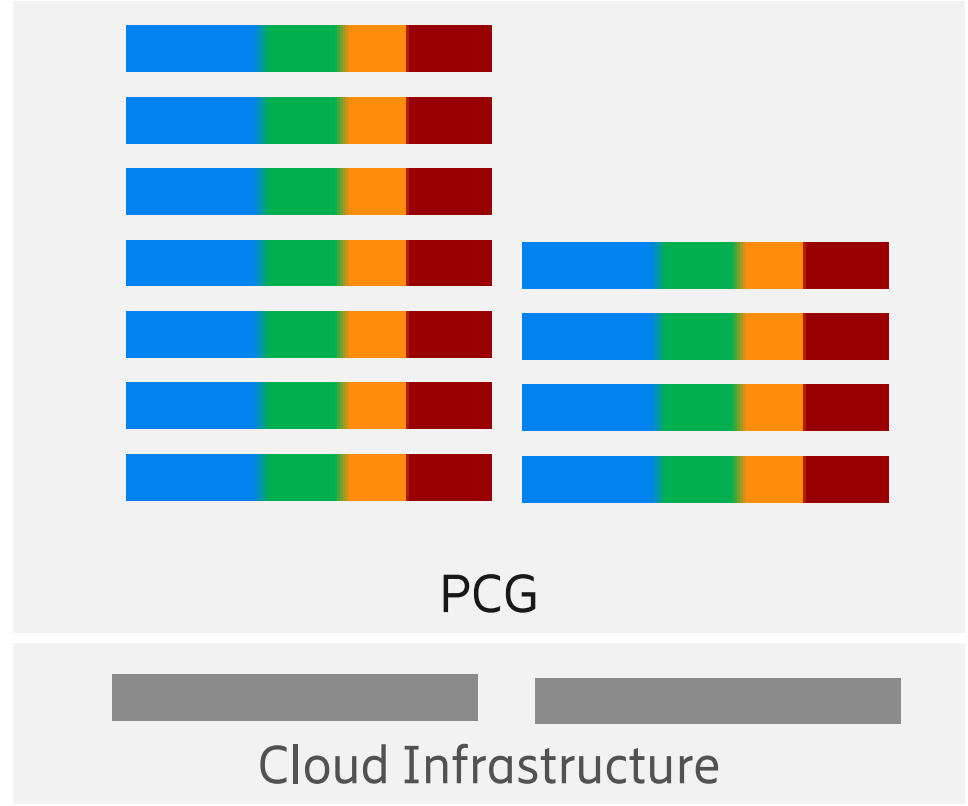

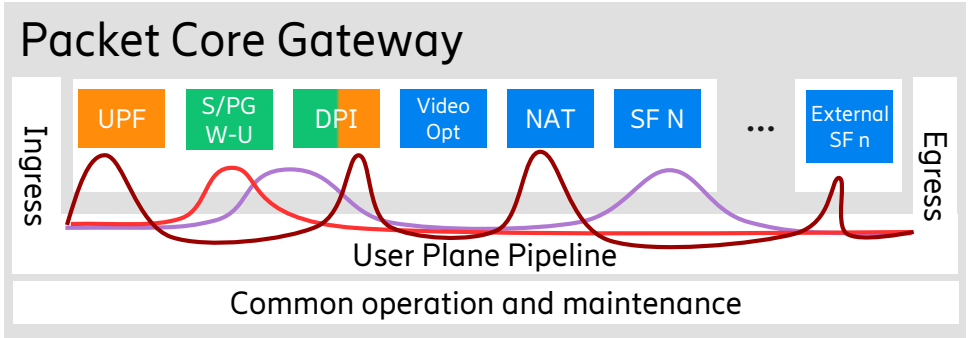

Lifecycle management

Network integration

Operation & Management

5GC Network Function | EPC Network Function | Service Function (internal/external)

ERICSSON | LG