엔드투엔드 5G 네트워크 슬라이싱

홍석원 실장

What & Why

What's the network slicing

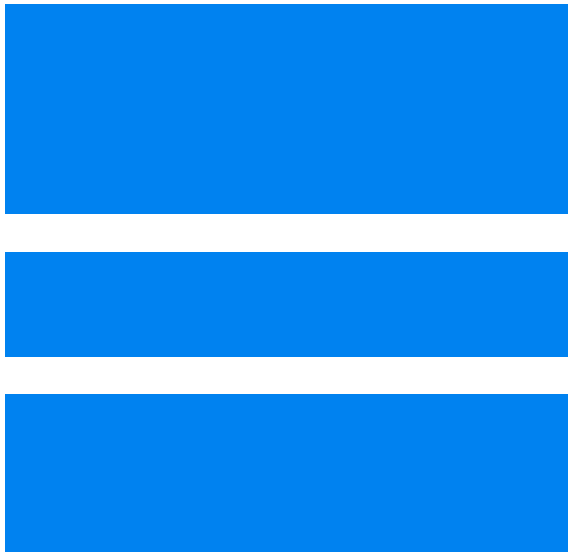

Separate networks per service

Shared network for all services

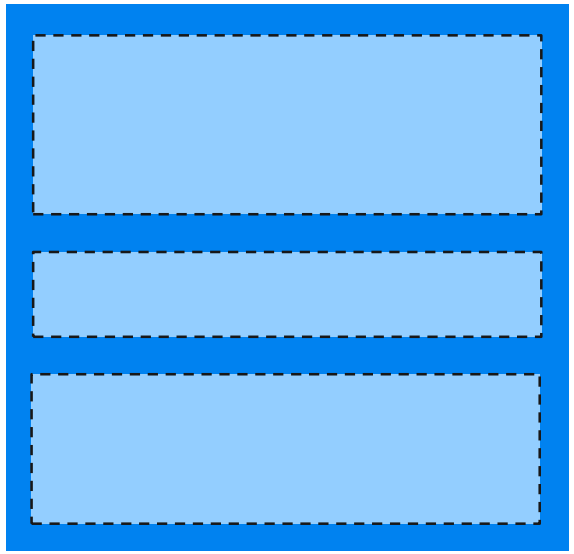

Separate virtual networks based on shared network

Network Slicing is the general concept of creating multiple virtual networks based on one underlying shared physical network. The users of the different slices can then experience different characteristics.

Network slicing

A network slice:

- Is a logical network
- Serves a defined business purpose or customer

Network slicing provides:

- Differentiated traffic handling, specific to each customer requirements
- Guaranteed network resources through a predefined service level agre ement (SLA)

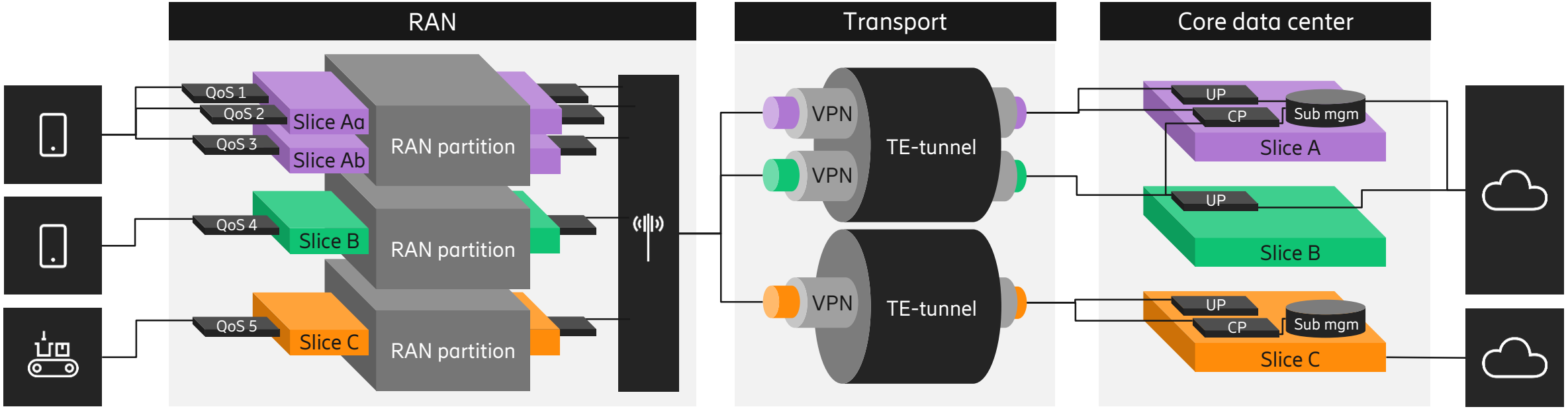

Market needs slices

Example: Automotive & road transport

Connectivity for road infrastructure

Coverage
Capacity

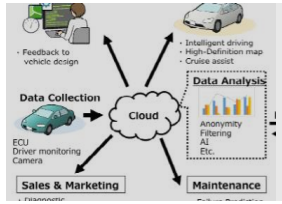

Vehicle-centric OEM and after market services (incl telematics,...)

Capacity
Coverage

Vehicle as sensor for general third party applications (weather, maps,...)

Capacity

Logistics, connected goods

Coverage

Cellular Connectivity

Capacity
Coverage
Latency

Convenience and infotainment services

Coverage
Capacity
Latency
Reliability

Fleet management incl remote assistance of autonomous vehicles

Coverage
Latency
Reliability

OEM Advanced driver assistance systems (ADAS)

Coverage
Latency
Reliability

Regulated Cooperative-Intelligent Transport Systems (C-ITS)

Massive IoT | Broadband IoT | Critical IoT

Why network slicing?

Enables 5G use cases by guaranteeing performance

Provides performance guarantees for Enterprises, utilities FWA, IoT, Public Safety

Slicing provides separation/isolation for services

Reduces time-to-market and costs to introduce new services

Provides attractive way to modernize legacy private networks

Provides opportunity to benefit from automation

Requirements to be tailored include:

- Mobility
- Data volumes
- Latency
- Level of activity
- Service availability
- Reliability

Beyond Network slicing

E2E consideration & Orchestration
Closed loop assurance
Network exposure
Securities
Private 5G network with network slicing
Matured solution

Multi-domain Network Slice Orchestration

- Application / Service Orchestration
- Configuration of the service
- Network Slicing Orchestration

- Resource Orchestration
- VNF Instantiation & Lifecycle Mgmt
- Intra-DC Networking
- Inter-DC Networking (virtual links)

WAN Orchestration, adding Transport awareness & programmability to Network Slicing

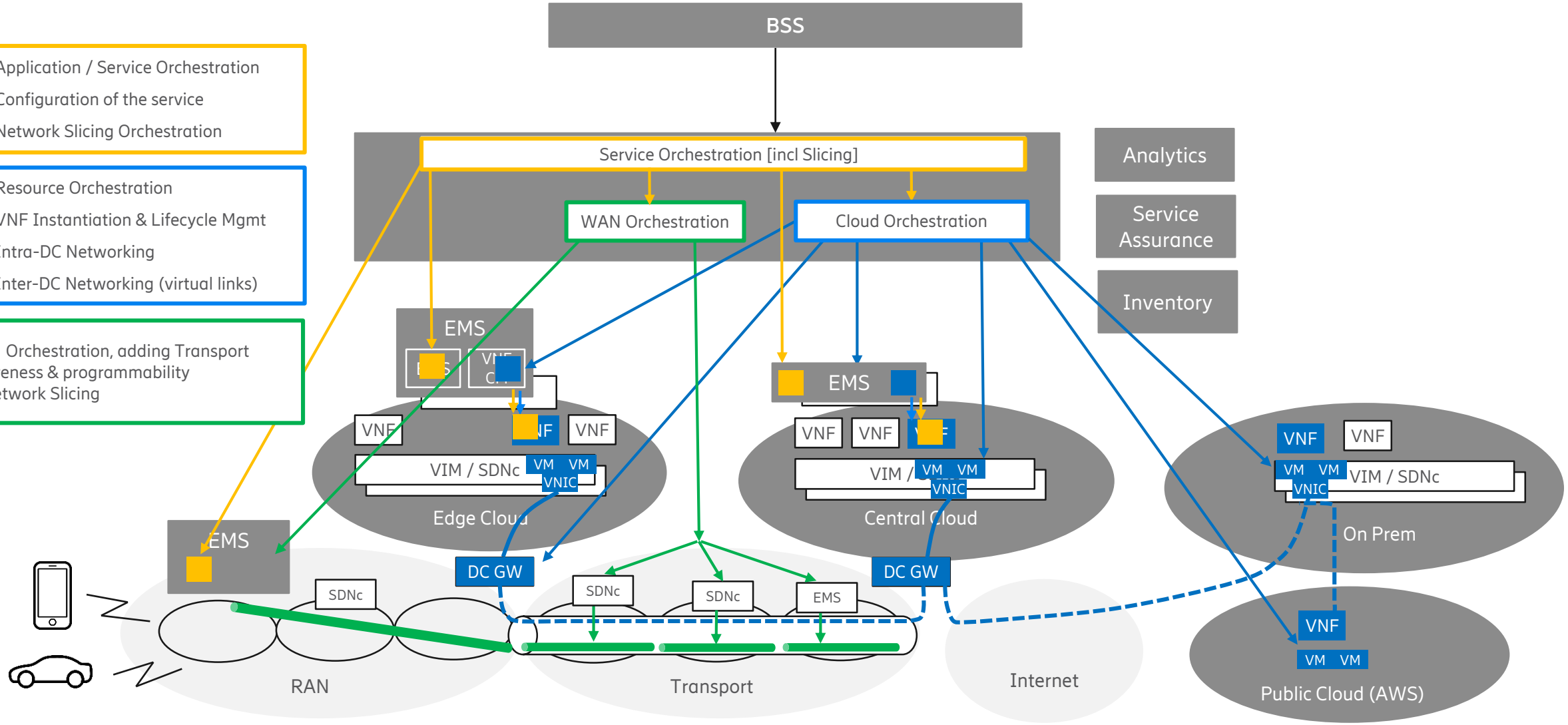

5G network slice service assurance

– Moving closed loop automation to the network slice level

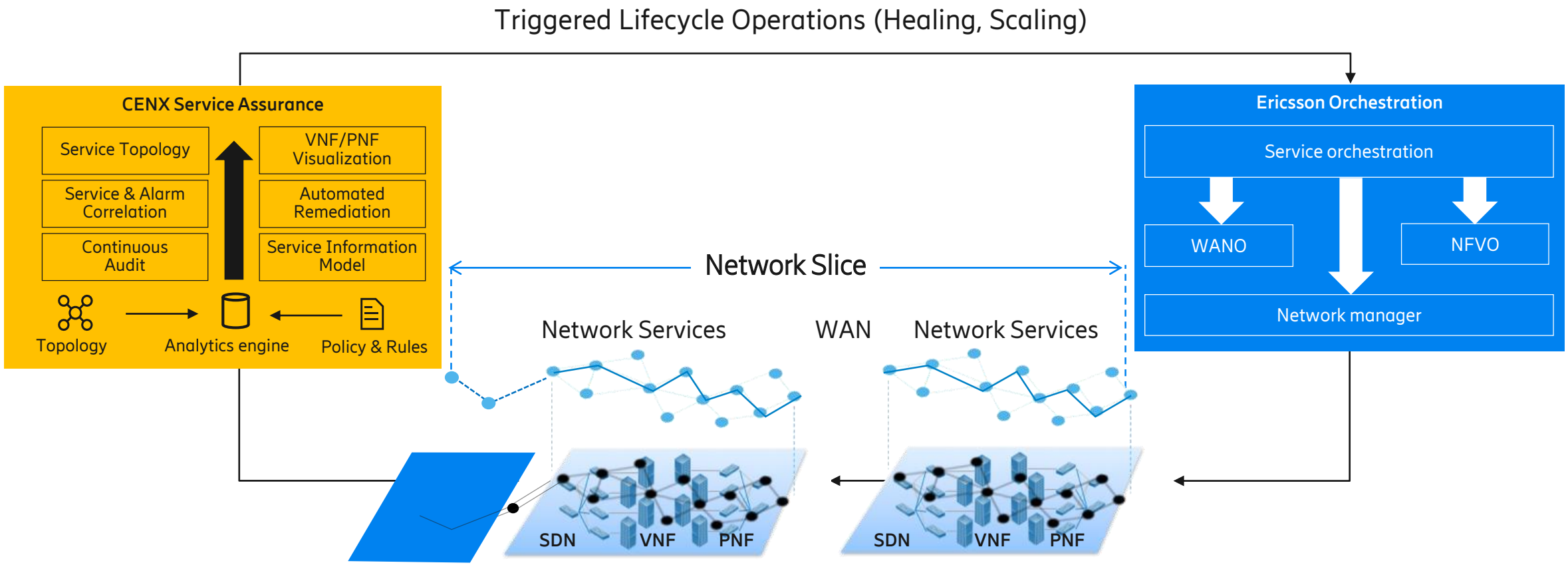

Application driven network slice selection

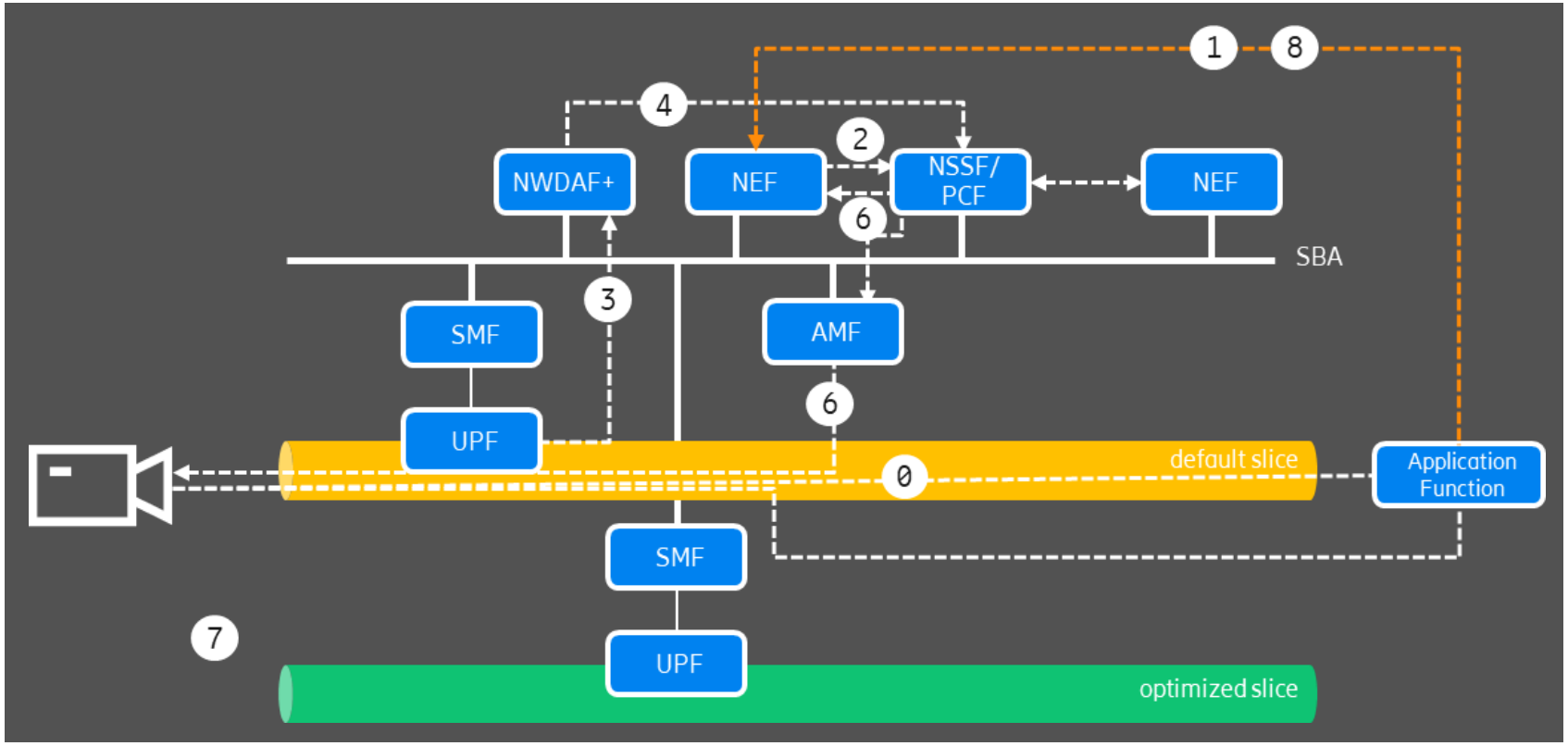

External communication (APIs)

Internal communication (e.g. SBA)

Operator's customers benefits

- Get high quality of experience while consuming the high bandwidth and low latency demanding services
- Automatic move to suitable slice provides seamless experience.

Security in network slicing

- Provide isolation between slices, both in terms of traffic and resources
- Protecting critical systems from DoS attacks through isolating resources and control in addition to user traffic
- Slice limits the scope of potential attack
- Slices can be customized with different security mechanisms and policies such as firewall, access policies and packet inspection

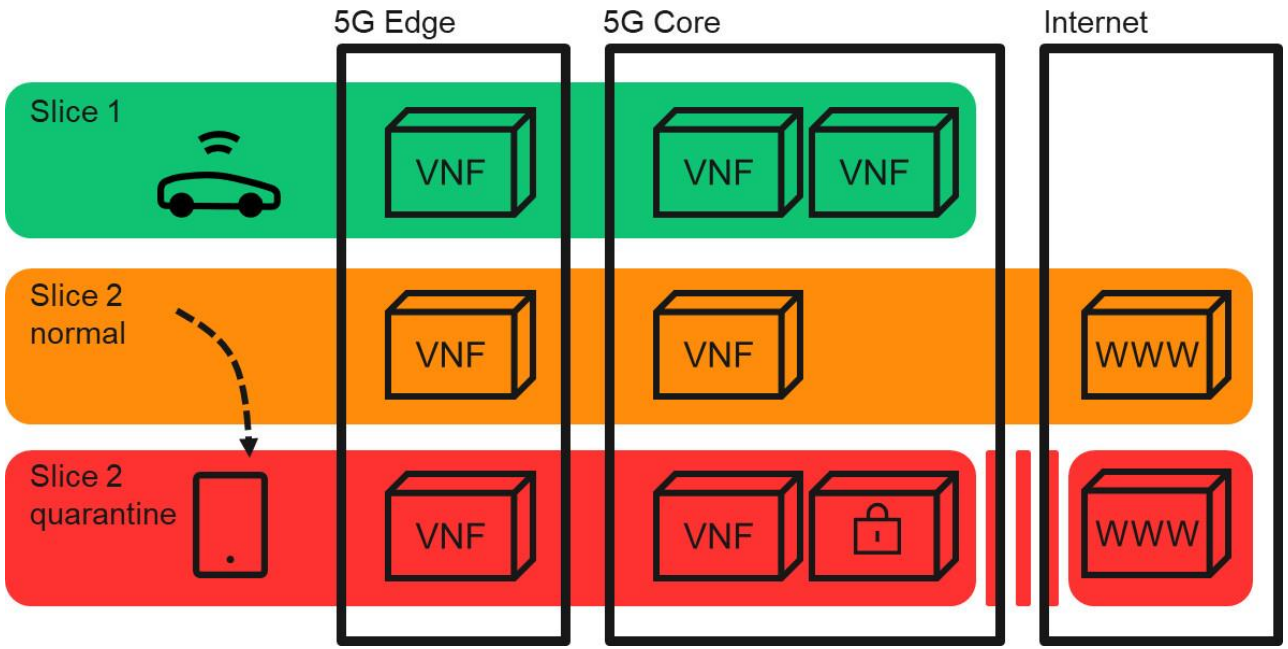

Enable private 5G networks

Network Slicing Serves to enable:

Private 5G Networks (Services). Offerings providing enterprises, utilities etc. a customized network experience/service, with specific characteristics/SLAs, security, exposed APIs, self-management beyond what is feasible with services based on the regular public network as it is.

Can be delivered as different variants:

Stand-alone Private 5G Network

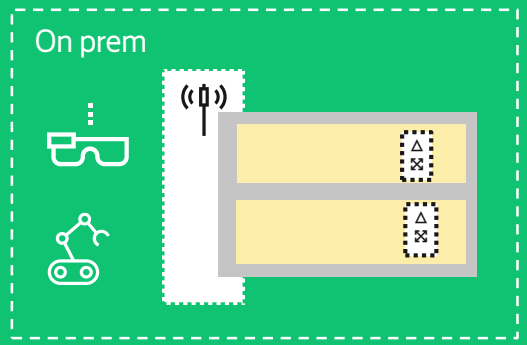

Hybrid Private 5G Network

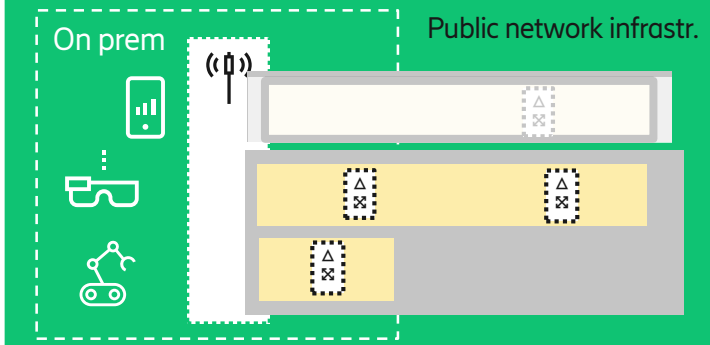

Virtual Private 5G Network

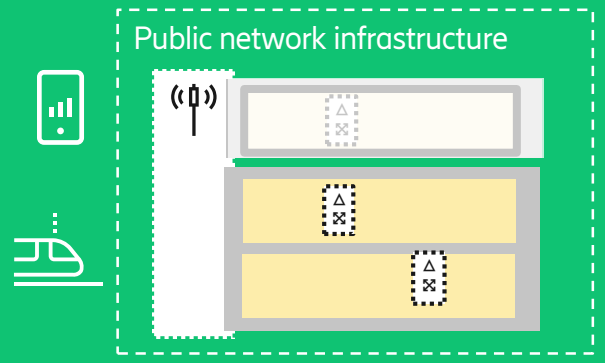

Example: Slicing in a Campus deployment

Hybrid private 5G network

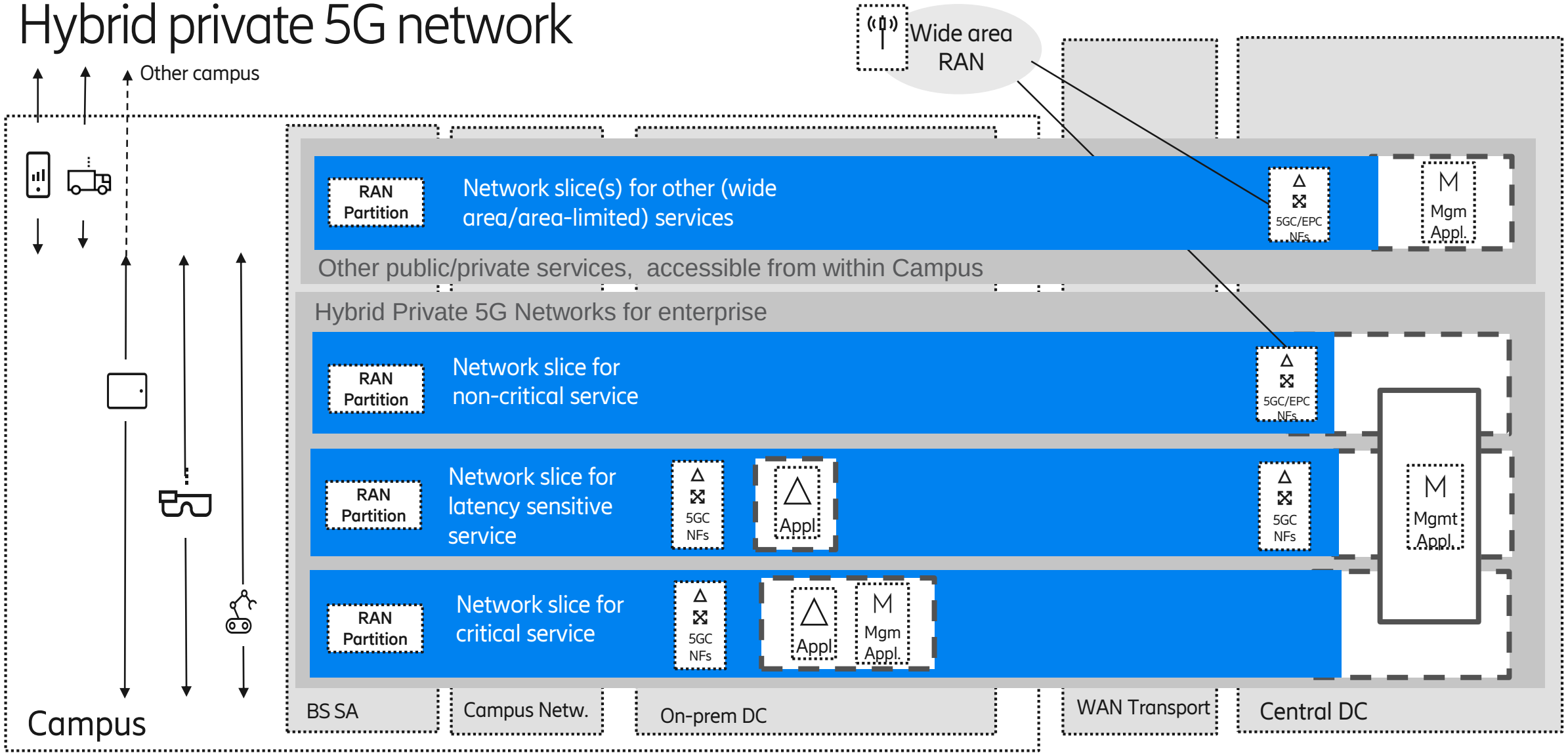

Ericsson is ready for Network Slicing - long-term architecture with vRAN and 5G Core (5GC)

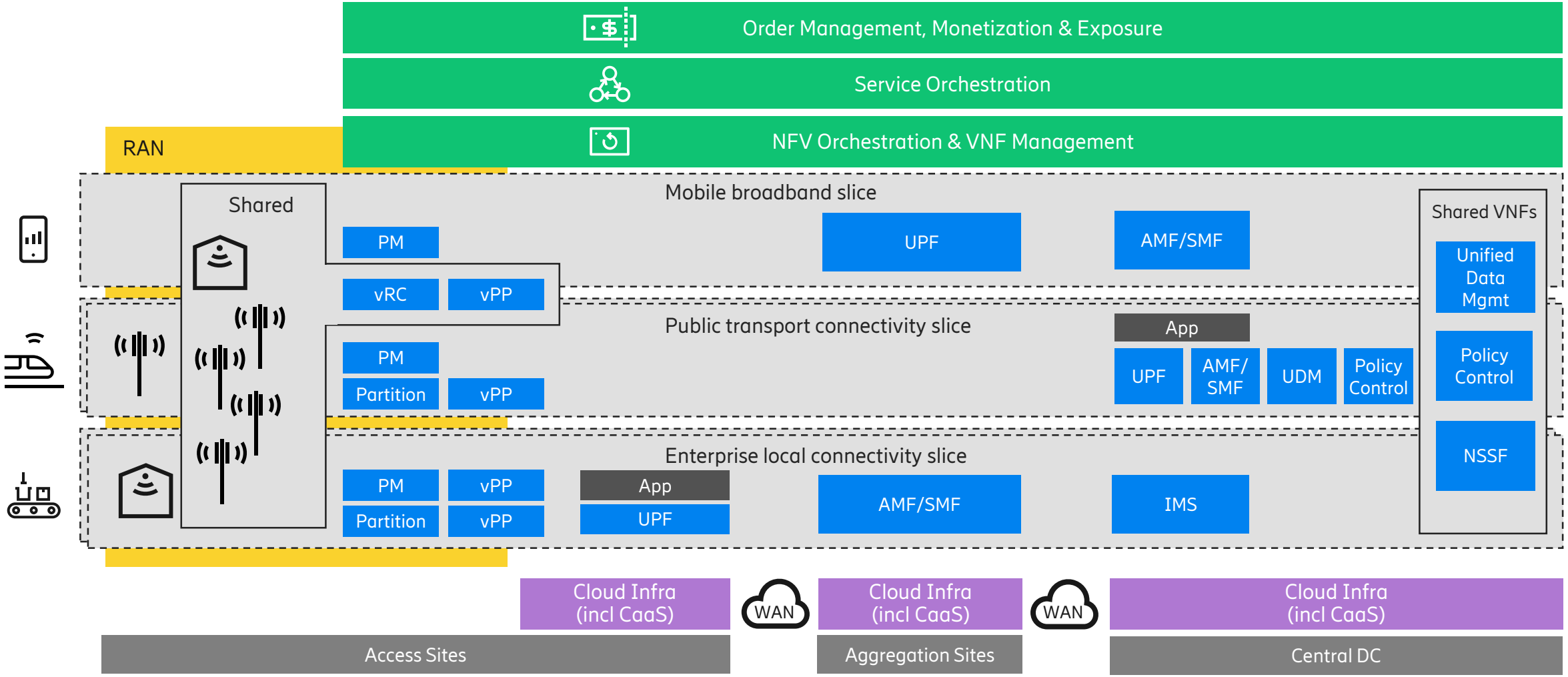

Uses cases

Example
– Network Slicing for railways

Priority

High — Medium — Low

Network Slices

Slice 1: Railways (cMTC)
- Driver communication & management systems
- SecuritycCameras
- Passenger Wi-Fi

Slice 2: eMBB
- Public MBB

One Network (RAN & CORE)

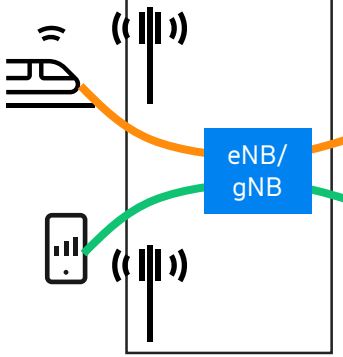

Core Network

Railway slice
- EPG -U (user plane)
- MME/EPG-C (control plane)

Mobile broadband slice
- MME/EPG (user & control plane)

Shared
- Unified Data Mgmt
- Policy Control

Use case –Connected Drones

- Live video from a drone flying remotely (in Goteborg) and control the camera and the connectivity service through a real Drones Management System
- The secure communication between app. And droneis established.
- The mission of the drone is created in the map for the inspection of the tower, and started.
- When we zoom the video from the drone for deeper inspection (using the app.), the quality of the image will decrease and the visitor can change the QoS (using QoS API) to increase the video quality automatically and in real-time.

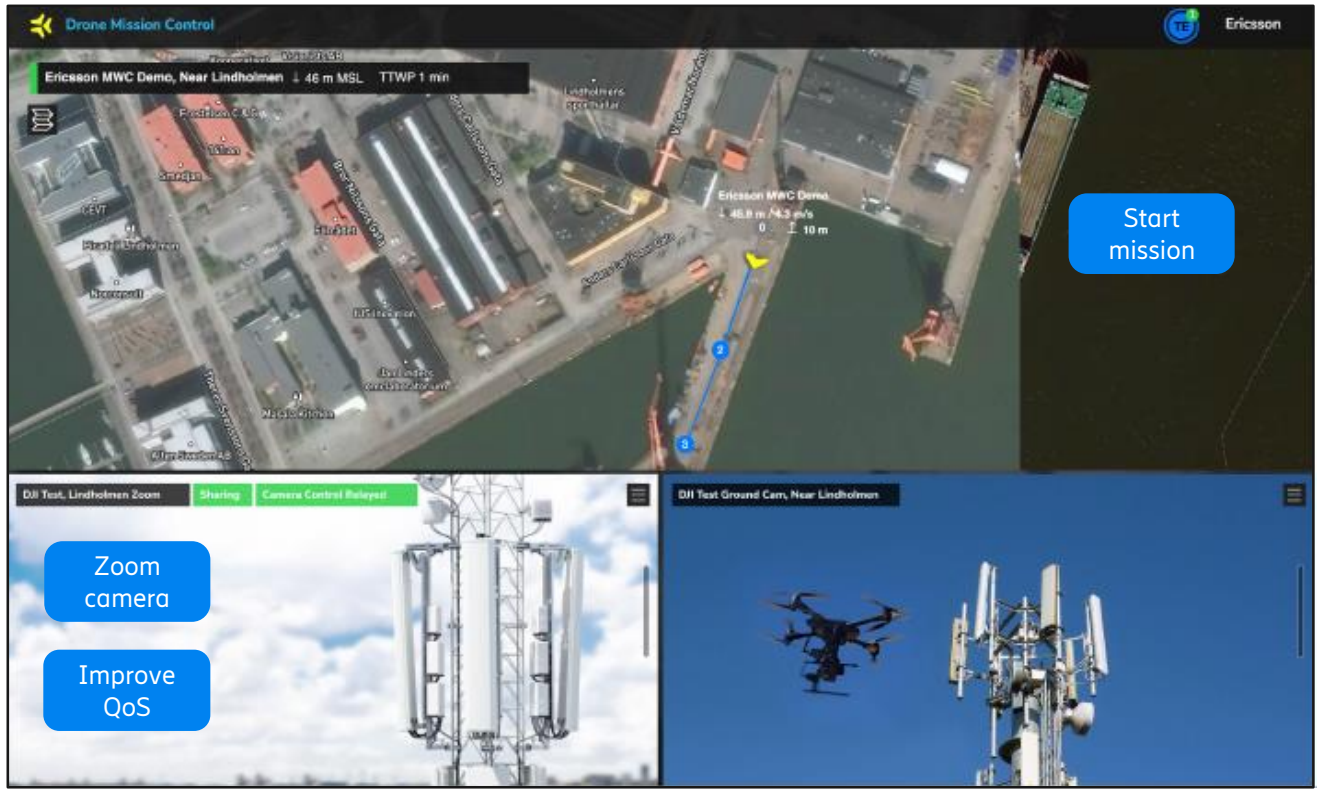

Remote control of the Drone

Application Driven Dynamic Slice Selection (5G enabled)

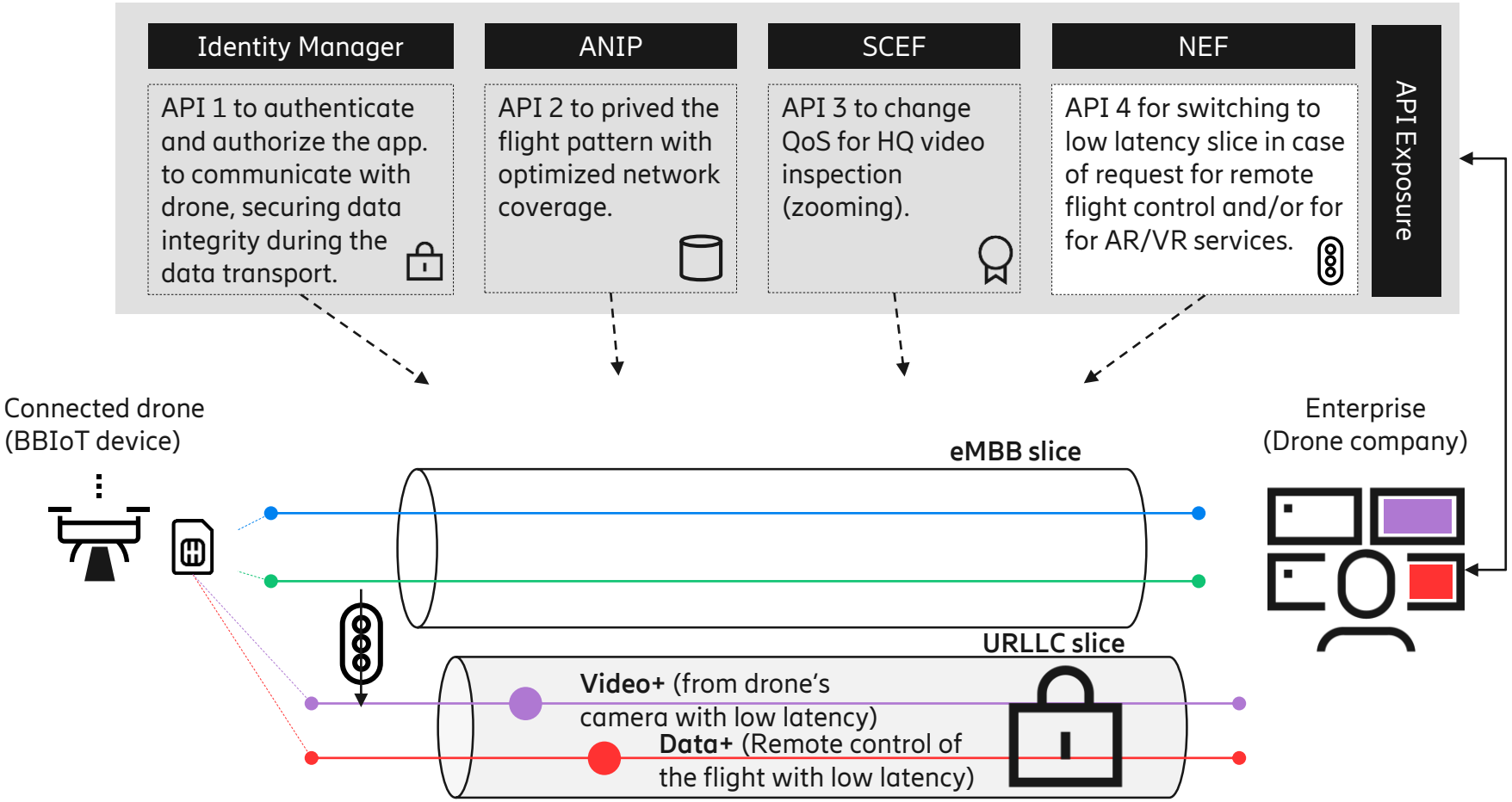

5G use cases enabled by Network Slicing – Examples

Streamed gaming

Robot control

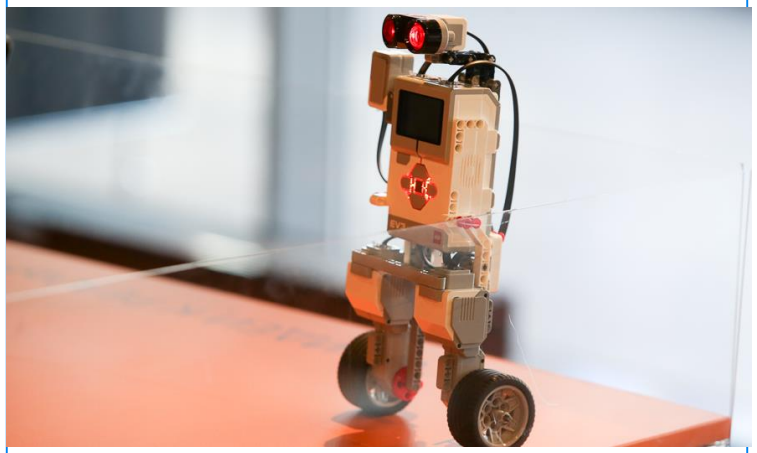

Connected vehicle

Dedicated QoS for services with low latency and high reliability needs

ERICSSON | LG